September 2015

DIN EN 14055

ICS 91.140.70

Supersedes
DIN EN 14055:2011-02
See start of application

WC and urinal flushing cisterns; English version EN 14055:2010+A1:2015, English translation of DIN EN 14055:2015-09

Spülkästen für WC-Becken und Urinale;
Englische Fassung EN 14055:2010+A1:2015,
Englische Übersetzung von DIN EN 14055:2015-09

Réservoirs de chasse d'eau pour WC et urinoirs;
Version anglaise EN 14055:2010+A1:2015,
Traduction anglaise de DIN EN 14055:2015-09

Document comprises 55 pages

Translation by DIN-Sprachendienst.
In case of doubt, the German-language original shall be considered authoritative.

© No part of this translation may be reproduced without prior permission of
DIN Deutsches Institut für Normung e. V., Berlin. Beuth Verlag GmbH, 10772 Berlin, Germany,
has the exclusive right of sale for German Standards (DIN-Normen).

English price group 21
www.din.de
www.beuth.de

08.15 2349204

Normen-Download-Beuth-Ideal Standard GmbH-KdNr.6440676-LfNr.7390503001-2016-02-11 10:29

A comma is used as the decimal marker.

Start of application

The start of application of this standard is 2015-09-01.

It should be noted that, in Germany, CE conformity marking of construction products will be permitted once this standard has been listed in the Official Journal of the European Union and/or the *Bundesanzeiger* (German Federal Gazette) and from the date given therein.

For further information, users of this standard should refer to the websites of the European Commission or of the relevant building authority.

The standard which this document replaces, DIN EN 14055:2011-02, may be used in parallel with this standard during a specified transition period where such has been laid down in the Official Journal of the European Union and/or the *Bundesanzeiger* (German Federal Gazette).

National foreword

This document (EN 14055:2010+A1:2015) has been prepared by Technical Committee CEN/TC 163 “Sanitary appliances” (Secretariat: UNI, Italy).

The responsible German body involved in its preparation was the *DIN-Normenausschuss Wasserwesen* (DIN Standards Committee Water Practice), Working Committee NA 119-05-18-08 UA *Spülkästen*.

Amendments

This standard differs from DIN EN 14055:2011-02 as follows:

a) in Clause 2 “Terms and definitions”, “3.28 product type” has been added;

b) flush pipes of design B1 and B2 with dimensional and hydraulic requirements have been added;

c) Clause 9 “Dangerous substances” has been revised;

d) Clause 10 “Marking” has been revised;

e) the former Clause 11 “Evaluation of conformity” has been replaced by Clause 11 “Assessment and verification of constancy of performance – AVCP”;

f) Annex ZA “Clauses of this European Standard addressing the provisions of the EU Construction Products Regulation” (Regulation (EU) No. 305/2011) has been updated;

g) the standard has been editorially revised.

Previous editions

DIN 19542: 1970-03, 1984-10
DIN EN 14055: 2011-02

Normen-Download-Beuth-Ideal Standard GmbH-KdNr.6440676-LfNr.7390503001-2016-02-11 10:29

EUROPEAN STANDARD

NORME EUROPÉENNE

EUROPÄISCHE NORM

EN 14055:2010+A1

June 2015

ICS 91.140.70

Supersedes EN 14055:2010

English Version

WC and urinal flushing cisterns

Réservoirs de chasse d'eau pour WC et urinoirs

Spülkästen für WC-Becken und Urinale

This European Standard was approved by CEN on 16 October 2010 and includes Amendment 1 approved by CEN on 6 April 2015.

CEN members are bound to comply with the CEN/CENELEC Internal Regulations which stipulate the conditions for giving this European Standard the status of a national standard without any alteration. Up-to-date lists and bibliographical references concerning such national standards may be obtained on application to the CEN-CENELEC Management Centre or to any CEN member.

This European Standard exists in three official versions (English, French, German). A version in any other language made by translation under the responsibility of a CEN member into its own language and notified to the CEN-CENELEC Management Centre has the same status as the official versions.

CEN members are the national standards bodies of Austria, Belgium, Bulgaria, Croatia, Cyprus, Czech Republic, Denmark, Estonia, Finland, Former Yugoslav Republic of Macedonia, France, Germany, Greece, Hungary, Iceland, Ireland, Italy, Latvia, Lithuania, Luxembourg, Malta, Netherlands, Norway, Poland, Portugal, Romania, Slovakia, Slovenia, Spain, Sweden, Switzerland, Turkey and United Kingdom.

EUROPEAN COMMITTEE FOR STANDARDIZATION
COMITÉ EUROPÉEN DE NORMALISATION
EUROPÄISCHES KOMITEE FÜR NORMUNG

CEN-CENELEC Management Centre: Avenue Marnix 17, B-1000 Brussels

© 2015 CEN All rights of exploitation in any form and by any means reserved worldwide for CEN national Members.

Ref. No. EN 14055:2010+A1:2015 E

Normen-Download-Beuth-Ideal Standard GmbH-KdNr.6440676-LfNr.7390503001-2016-02-11 10:29

Contents

Page

Foreword 4
1 Scope 5
2 Normative references 5
3 Terms and definitions 5
4 Classification 8
5 Requirements and test methods for class 1 products 8
5.1 Design 8
5.1.1 Flushing cistern equipment 8
5.1.2 Water supply connection 9
5.1.3 Supply piping 9
5.1.4 Removable parts 9
5.1.5 Connecting dimensions 9
5.1.6 Flush pipes 10
5.2 Hydraulic and mechanical characteristics 13
5.2.1 Flush volume 13
5.2.2 Water-saving devices 14
5.2.3 Flush rate and impact force 14
5.2.4 Overflow 15
5.2.5 Inlet valve opening characteristics for water saving flushing 16
5.2.6 Safety margin – Dimension “*c*” 16
5.2.7 Backflow prevention, air gap, safety margin – Dimension “*a*” 17
5.2.8 Outlet valve leaktightness 17
5.2.9 Outlet valve reliability 17
5.2.10 Operating force 17
5.2.11 Durability 17
5.3 Test methods 18
5.3.1 General 18
5.3.2 Flush volume 18
5.3.3 Flush rate 19
5.3.4 Determination of the overflow capacity 23
5.3.5 Inlet valve opening characteristics 24
5.3.6 Determination of dimension “*c*” 24
5.3.7 Determination of dimension “*a*” 24
5.3.8 Outlet valve leak tightness 24
5.3.9 Outlet valve reliability test 24
5.3.10 Operating force 25
5.3.11 Impact force 26
6 Functional requirements and test methods for class 2 products 30
6.1 Inlet valve 30
6.2 Backflow prevention 30
6.3 Marking of flushing cistern 30
6.4 Warning pipe and overflow provision 30
6.5 Flush volume 30
6.5.1 Full flush 30
6.5.2 Reduced flush 31
6.6 Flush rate 31
6.7 Physical endurance and leakage of flushing device 31
6.8 Chemical endurance of flushing device 31

Normen-Download-Beuth-Ideal Standard GmbH-KdNr.6440676-LfNr.7390503001-2016-02-11 10:29

6.9 Durability 31
6.10 Test methods 31
6.10.1 Inlet valve tests 31
6.10.2 Warning pipe and overflow provisions 32
6.10.3 Flush volume test 32
6.10.4 Flush rate test 33
6.10.5 Physical endurance and leakage test of flushing device 34
6.10.6 Chemical endurance test of flushing device 35
6.10.7 Requirements for compatibility testing of class 2 products 35

7 Requirements and test methods for class 3 products 36
7.1 Requirements and test methods 36
7.2 Adjustment 36

8 Acoustic characteristics 36

9 Dangerous substances 36

10 Marking 36

11 Assessment and verification of constancy of performance – AVCP 39
11.1 General 39
11.2 Type testing 39
11.2.1 General 39
11.2.2 Test samples, testing and compliance criteria 40
11.3 Factory production control (FPC) 42
11.3.1 General 42
11.3.2 Equipment 42
11.3.3 Raw materials and components 42
11.3.4 Product testing and assessment 42
11.3.5 Non-complying products 42
11.3.6 Corrective action 43

Annex ZA (informative) [A1] **Clauses of this European Standard addressing the provisions of the EU Construction Products Regulation** [A1] 44

Bibliography 53

Normen-Download-Beuth-Ideal Standard GmbH-KdNr.6440676-LfNr.7390503001-2016-02-11 10:29

Foreword

This document (EN 14055:2010+A1:2015) has been prepared by Technical Committee CEN/TC 163 “Sanitary appliances”, the secretariat of which is held by UNI.

This European Standard shall be given the status of a national standard, either by publication of an identical text or by endorsement, at the latest by December 2015, and conflicting national standards shall be withdrawn at the latest by March 2017.

Attention is drawn to the possibility that some of the elements of this document may be the subject of patent rights. CEN [and/or CENELEC] shall not be held responsible for identifying any or all such patent rights.

This document includes Amendment 1 approved by CEN on 6 April 2015.

This document supersedes EN 14055:2010.

The start and finish of text introduced or altered by amendment is indicated in the text by tags ▌A1⟩ ⟨A1▌.

▌A1⟩ This document has been prepared under a mandate given to CEN by the European Commission and the European Free Trade Association, and supports essential requirements of the EU Construction Products Regulation.

For relationship with EU Construction Products Regulation, see informative Annex ZA, which is an integral part of this document. ⟨A1▌

According to the CEN-CENELEC Internal Regulations, the national standards organizations of the following countries are bound to implement this European Standard: Austria, Belgium, Bulgaria, Croatia, Cyprus, Czech Republic, Denmark, Estonia, Finland, Former Yugoslav Republic of Macedonia, France, Germany, Greece, Hungary, Iceland, Ireland, Italy, Latvia, Lithuania, Luxembourg, Malta, Netherlands, Norway, Poland, Portugal, Romania, Slovakia, Slovenia, Spain, Sweden, Switzerland, Turkey and the United Kingdom.

Normen-Download-Beuth-Ideal Standard GmbH-KdNr.6440676-LfNr.7390503001-2016-02-11 10:29

1 Scope

This European Standard specifies design, performance requirements and the test methods for WC and urinal flushing cisterns with flushing mechanism, inlet valve and overflow.

This document covers flushing cisterns designed to be connected to drinking water installations inside buildings.

This standard does not cover automatic valveless siphon flushing cisterns for flushing urinals.

NOTE Flushing cisterns for one-piece WCs and close-coupled suites are covered by EN 997.

2 Normative references

The following referenced documents are indispensable for the application of this document. For dated references, only the edition cited applies. For undated references, the latest edition of the referenced document (including any amendments) applies.

EN 997:2003, *WC pans and WC suites with integral trap*

EN 1717, *Protection against pollution of potable water in water installations and general requirements of devices to prevent pollution by backflow*

EN 13407:2006, *Wall-hung urinals — Functional requirements and test methods*

EN 14124, *Inlet valves for flushing cisterns with internal overflow*

BS 1212-2:1990, *Float operated valves — Specification for diaphragm type float operated valves (copper alloy body) (excluding floats)*

BS 1212-3:1990, *Float operated valves — Specification for diaphragm type float operated valves (plastics bodied) for cold water services only (excluding floats)*

BS 1212-4:1991, *Float operated valves — Specification for compact type float operated valves for WC flushing cisterns (including floats)*

3 Terms and definitions

For the purposes of this document, the following terms and definitions apply.

3.1
valve-type flushing cistern
cistern with integral valve outlet device, for storage and discharge of a defined volume of flushing water for removal of excrement from a WC pan

3.2
valveless-type flushing cistern
cistern with integral syphonic actuated outlet device, for storage and discharge of a defined volume of flushing water for removal of excrement from a WC pan

NOTE Both types of flushing cisterns are available, as detailed below:

Normen-Download-Beuth-Ideal Standard GmbH-KdNr.6440676-LfNr.7390503001-2016-02-11 10:29

Wall-hung independent low-level

Built-in independent

Wall-hung independent mid-level

Wall-hung independent high-level

One-piece integral (with WC pan)

Close-coupled

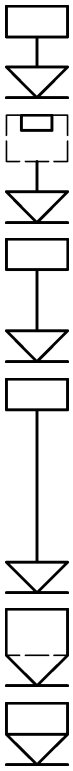

3.3
close-coupled multiple use flushing cistern
close-coupled flushing cistern for use with different WC pans

3.4
independent flushing cistern
flushing cistern mounted separately from a WC pan or urinal

3.5
outlet valve
mechanism for opening and closing the outlet orifice of the flushing cistern

3.6
operating mechanism
mechanism to open, and if applicable, close the outlet valve

3.7
flush pipe
connecting pipe between a flushing cistern’s outlet and a WC’s or urinal's inlet

3.8
overflow
device enabling release of excess water from a flushing cistern when water reaches a pre-determined level

3.9
inlet valve
valve that controls and shuts off the flow of water into a flushing cistern

3.10
overflow level
water level corresponding to the upper edge of the overflow or to the lower edge of the overflow notch

Normen-Download-Beuth-Ideal Standard GmbH-KdNr.6440676-LfNr.7390503001-2016-02-11 10:29

3.11
maximum water level
highest water level reached after flow stabilisation, in the event of continuous supply, as a result of malfunction of the inlet valve

3.12
critical water level
highest water level in any part of the appliance, 2 s after the supply is cut off

3.13
residual water level
water level after a full flush is completed

3.14
adjustable residual water level
water level in a cistern, after (uninterrupted) flushing, when an outlet mechanism can be adjusted to the elevated residual water level

3.15
meniscus level
level resulting from surface tension of water during overflowing

3.16
nominal water level
water level when a flushing cistern is filled to the nominal flush volume

3.17
nominal flush volume
volume of water indicated, when a flushing cistern is filled to the nominal water level

3.18
flush volume
volume of water discharged from the flushing cistern during a flush cycle

3.19
safety margin
c
distance between the nominal water level determined by the manufacturer and the overflow level

3.20
flush rate
volume of water flowing out of a flushing cistern as a function of time

3.21
test height
distance between the seat of the outlet valve and the horizontal axis of the flush pipe

3.22
impact force
force of the flushing water at the outlet of the flush pipe

3.23
flushing device
device fitted to a cistern to provide controlled measured volume(s) of water to a WC pan or suite for flushing

3.24
water-saving device
flushing device that permits a part of the total flush volume to be delivered, e.g. acting as double-action mechanisms (interruptible) or double-control mechanisms (dual control or dual flush)

Normen-Download-Beuth-Ideal Standard GmbH-KdNr.6440676-LfNr.7390503001-2016-02-11 10:29

3.25
warning level
level of spill over of a vertically mounted warning pipe connection or the invert of a horizontally mounted warning pipe connection, or the level at which an equally effective (warning) device would operate

3.26
short-term leak test
leak test consisting of a 15 min wait after flushing then positioning paper designed to change colour when wet, under the flushing device for 10 min

NOTE A leak is defined as being visible discharge of water amounting to more than three separate drops.

3.27
long-term leak test
leak test consisting of a 2 h wait after flushing then positioning paper designed to change colour when wet, under the outlet for 15 min

NOTE A leak is defined as being visible discharge of water amounting to more than three separate drops.

A1 3.28
product type
construction product with a set of representative performance levels or classes in relation to its Essential Characteristics, produced using a given combination of raw materials or other elements in a specific production process A1

4 Classification

Flushing cisterns are classified as described below:

— **Class 1:** Flushing cisterns tested in accordance with the requirements of Clauses 5 and 8 using a nominal flush volume of either 4 l, 5 l, 6 l, 7 l or 9 l.

— **Class 2:** Flushing cisterns tested in accordance with the requirements of Clauses 6 and 8 using a maximum flushing volume of 6 l, or a dual-flush which combines a maximum flush of 6 l and a reduced flush no greater than two-thirds of the maximum flush.

— **Class 3:** Class 1 flushing cistern intended to be used in connection with urinals.

5 Requirements and test methods for class 1 products

5.1 Design

5.1.1 Flushing cistern equipment

An equipped flushing cistern comprises:

— a shell, provided with a removable lid or an access flap allowing access to components;

— an inlet valve complying with EN 14124;

— a flushing device;

— an overflow device;

— an operating mechanism;

Normen-Download-Beuth-Ideal Standard GmbH-KdNr.6440676-LfNr.7390503001-2016-02-11 10:29

— a flush pipe, when the cistern is for use with an independent WC pan.

In special cases, a combined fitting providing the functions of filling, overflowing and evacuation is permissible. In this case, the fitting shall be designed to comply with the hygiene, physico-chemical, leaktightness, hydraulic, pressure resistance, acoustic and mechanical characteristics specified in EN 14124. The tests shall be performed on the flushing cistern as supplied.

5.1.2 Water supply connection

The inlet valve can be connected to the cistern through:

— the side;

— the back;

— the underside;

— the top.

5.1.3 Supply piping

All materials of the supply piping which could be in contact with drinking water shall not be a danger to health. They shall not change the taste, aroma or visual appearance of the drinking water.

5.1.4 Removable parts

It shall be possible to dismantle removable parts, without having to remove the flushing cistern.

5.1.5 Connecting dimensions

The connecting dimensions shall comply with Table 1.

Normen-Download-Beuth-Ideal Standard GmbH-KdNr.6440676-LfNr.7390503001-2016-02-11 10:29

Table 1 — Connecting dimensions (Figures 1 and 2)

Designation	Symbol	Dimensions mm	Remarks
Hole for inlet valve	—	19 ± 2 [c]	For inlet valves size 3/8"
		23 ± 2 [c]	For inlet valves size ½"
Hole for outlet valve	*A*	63^{+2}_{-3} [c]	For ceramic flushing cisterns
		61^{+2}_{0} [c]	For thin-walled flushing cisterns (e.g. plastic)
		45^{+2}_{-3} [c]	For high level flushing cisterns
Inside diameter of outlet connection	*B*	$32{,}5^{+1}_{0}$ [c]	For flush pipes of design A
		$51^{+0{,}5}_{0}$ [c]	For flush pipes of design B
Outside diameter of outlet connection	*C* [a]	$49{,}5^{+0{,}4}_{0}$ [b]	For flush pipes of design C
Hole in the cover for operating device	—	40^{+2}_{-1} [c]	Recommended dimension

[a] Not applicable to flushing cisterns built into wall frames.

[b] Where the exterior diameter of the flush pipe is conical or has several stepped diameters, the maximum diameter is to be verified and recorded.

[c] Other dimensions are permissible if the performance of the cistern is assured.

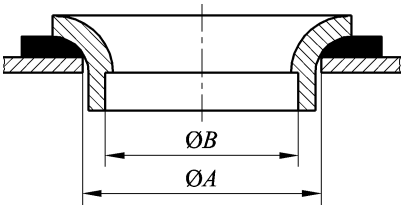

Key

See Table 1.

Figure 1 — [A1] Outlet connection for flush pipes of design A, B1 and B2 [A1]

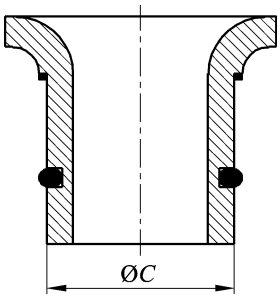

Key

See Table 1.

Figure 2 — Outlet connection for flush pipes of design C

[A1]

NOTE Design B means design B1 and design B2. [A1]

Normen-Download-Beuth-Ideal Standard GmbH-KdNr.6440676-LfNr.7390503001-2016-02-11 10:29

5.1.6 Flush pipes

The dimensions of flush pipes designed to equip WC pans for independent supply shall comply with Table 2. The flush pipe shall be provided by the manufacturer of the flushing cistern.

Table 2 — Dimensions of flush pipes (Figures 3 to 6)

A1

Designation	Symbol	Dimension mm	Remarks
Outside diameter inlet	*b*	$32^{+0,5}_{0}$	For flush pipes of design A
		$50^{+0,5}_{0}$	For flush pipes of designs B1 and B2
Inside diameter	*c*	50^{+1}_{0}	For flush pipes of design C
Outside diameter at outlet WC	*e*	$32^{+0,5}_{0}$	For flush pipes of design A
		$44^{+0,5}_{0}$	For flush pipes of design B1
		$40^{+0,5}_{0}$	For flush pipes of design B2
		$45^{+0,5}_{0}$	For flush pipes of design C
Inside diameter at outlet WC	*f*	≥ 39	For flush pipes of designs B1, B2 and C
Height of flush pipe	*h*	≥ 1 500	For flush pipes of design A
		≥ 165	For flush pipes of designs B1 and B2
		≥ 600	
		≥ 165	For flush pipes of design C
Length	*k*	≥ 210	For flush pipes of designs A, B1 and B2
		≥ 180	For flush pipes of design C
Length of vertical inlet portion	*m*	≥ 100	For flush pipes of design A
Radius of bend	*r*	50 to 80	For flush pipes of design A
		≥ 15	For flush pipes of designs B1 and B2
		≥ 5	For flush pipes of design C

A1

Apart from dimension *e* other dimensions are permissible, provided the performance requirements in 5.2 are satisfied.

Normen-Download-Beuth-Ideal Standard GmbH-KdNr.6440676-LfNr.7390503001-2016-02-11 10:29

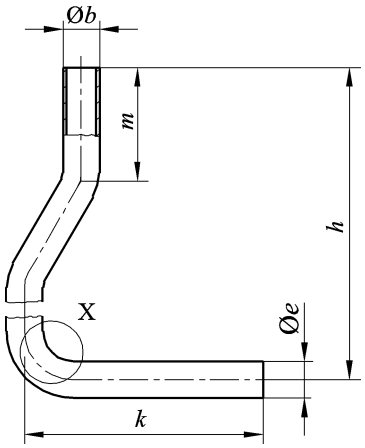

Key

See Table 2.

Figure 3 — Design A flush pipe for wall-hung high-level cisterns, fabricated in one or two parts

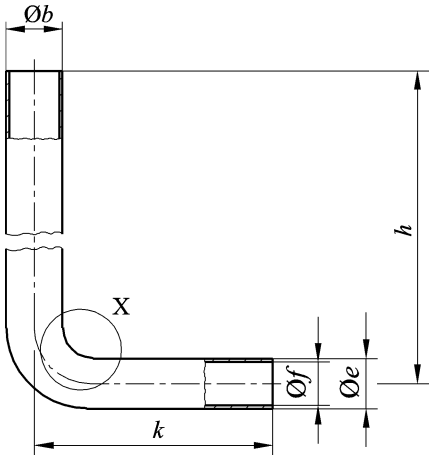

Key

See Table 2.

Figure 4 — [A1⟩ Design B1 and B2 flush pipes for wall-hung low-level or mid-level cisterns ⟨A1]

Normen-Download-Beuth-Ideal Standard GmbH-KdNr.6440676-LfNr.7390503001-2016-02-11 10:29

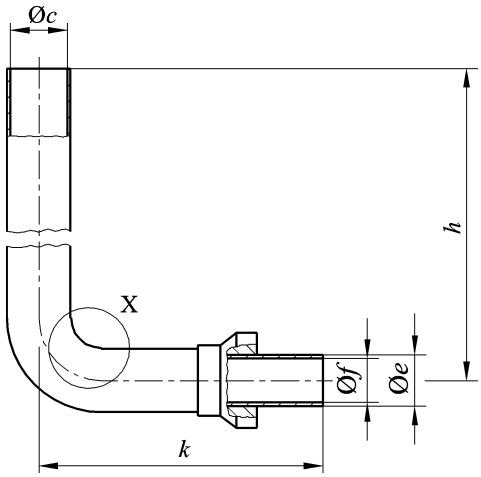

Key

See Table 2.

Figure 5 — Design C flush pipe for built-in cisterns

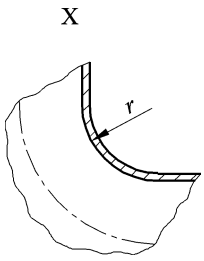

Key

r Radius of bend

Figure 6 — Detail X

5.2 Hydraulic and mechanical characteristics

5.2.1 Flush volume

Flush volume(s) shall correspond with those specified in Table 3, when measured as described in 5.3.2.

Normen-Download-Beuth-Ideal Standard GmbH-KdNr.6440676-LfNr.7390503001-2016-02-11 10:29

Table 3 — Flush volumes

Nominal flush volumes l	Flush volumes l			
	For complete flushing		For water-saving (dual) flushing	
	Minimum	Maximum	Minimum	Maximum
9,0	8,5	9,0	3,0	4,5 [a]
7,0	7,0	7,5	3,0	4,0 [a]
6,0	6,0	6,5	3,0	4,0 [a]
5,0	4,5	5,5	3,0	4,0 [a]
4,0	4,0	4,5	2,0	3,0 [a]

[a] Only for double-control water-saving (dual) flushing devices.

Flushing cisterns or their components shall be marked to allow the correct volume(s) of flush to be achieved.

Flushing cisterns with a nominal volume of 9 l, 7 l, 6 l, 5 l or 4 l can be used to deliver the different volumes shown in Table 3. Adjustment can be effected at the inlet valve and/or the outlet mechanism. The manufacturer's instructions shall describe the procedure and the consequences (e.g. increase in the residual water level or decrease in the filling level).

5.2.2 Water-saving devices

Water-saving mechanisms shall be designed so that, when selected, only part of the total flush volume is delivered.

Water-saving mechanisms shall comply with the requirements specified below:

a) Double-action mechanisms (interruptible):

   1) one action initiates flushing; and

   2) a second action stops the flush.

Devices with immediate and automatic closing are not permitted.

b) Double-control mechanisms (dual control):

   1) one control releases the full flush volume; and

   2) another control releases a reduced flush volume.

Both devices shall deliver flush volumes and flush rates in accordance with Tables 3 and 4.

5.2.3 Flush rate and impact force

When tested as described in 5.3.3 and 5.3.11, the flush rate and the impact force shall comply with the values specified in Table 4.

Normen-Download-Beuth-Ideal Standard GmbH-KdNr.6440676-LfNr.7390503001-2016-02-11 10:29

Table 4 — Flush rates and impact force

A1

Type of flushing cistern	Test height mm	Impact force N	Flush rate for complete flush l/s
Independent wall-hung low-level using flush pipe of design B1	200 ± 5	—	2,4 ± 0,2
Independent wall-hung low-level using flush pipe of design B2	330 ± 5[d]	—	2,2 ± 0,2
Independent built-in	≥ 195[a]	—	2,2 ± 0,2
Independent built-in	< 195[a]	> 3,9 (defined by the maximum method) or > 3,7 (defined by the fixed time frame method)	2,2 ± 0,2
Independent wall-hung mid-level	565 ± 5	—	$1{,}8\ ^{+0{,}4}_{-0{,}1}$
Independent wall-hung high-level	1 365 ± 5	—	$1{,}8\ ^{+0{,}4}_{-0{,}1}$
One-piece and close-coupled	—	—	n.a.[b]
Multiple use close-coupled	—	—	min. 2,0[c]

[a] Flushing cisterns with integral flush pipes and flushing cisterns built into wall frames shall be tested as supplied by the manufacturer, regardless of the test height.

[b] One-piece and close-coupled type will be tested in accordance with EN 997.

[c] Independent from this value, the flushing cistern shall be tested in accordance with EN 997 with dedicated WC pans specified by the manufacturer of multiple close-coupled flushing cisterns.

[d] This test height is valid for flush pipe of design B2 with outside diameter at outlet to WC of $40\ ^{+0{,}5}_{0}$ mm.

A1

5.2.4 Overflow

When tested as described in 5.3.4, the overflow shall be designed in accordance with the requirements specified below (see Figure 7):

a) the distance between the maximum water level and the level of overflow shall be ≤ 20 mm;

b) the distance between the critical water level and the level of overflow shall be ≤ 10 mm;

c) the distance between the meniscus level and the level of overflow shall be ≤ 5 mm.

Normen-Download-Beuth-Ideal Standard GmbH-KdNr.6440676-LfNr.7390503001-2016-02-11 10:29

Dimensions in millimetres

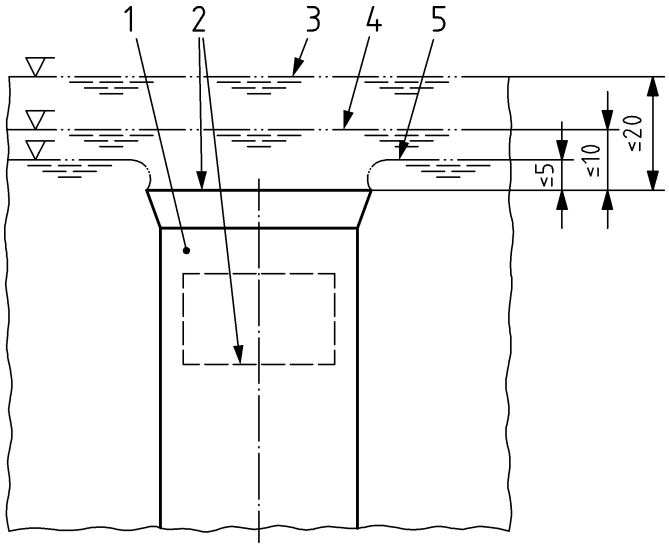

Key

1 overflow pipe

2 overflow level

3 maximum water level

4 critical water level

5 meniscus level

Figure 7 — Maximum, critical and overflow level

5.2.5 Inlet valve opening characteristics for water saving flushing

When tested as described in 5.3.5, inlet valves used with flushing cisterns equipped with a water-saving device shall re-open during or after the short flush has been completed.

5.2.6 Safety margin – Dimension "*c*"

When tested as described in 5.3.6, dimension "*c*" (see Figure 8) corresponding to the distance between the overflow level and the maximum nominal water level indicated by the manufacturer shall be at least 20 mm.

Normen-Download-Beuth-Ideal Standard GmbH-KdNr.6440676-LfNr.7390503001-2016-02-11 10:29

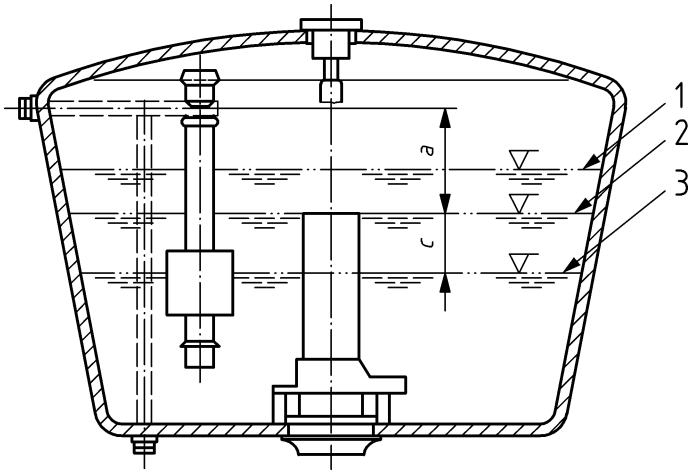

Key

1 maximum water level

2 overflow level

3 maximum nominal water level

a distance between overflow level and the point of the air inlet orifice of the inlet valve

c safety margin

Figure 8 — Safety margin dimensions

5.2.7 Backflow prevention, air gap, safety margin – Dimension "*a*"

When tested as described in 5.3.7, the dimension "*a*" (see Figure 8) between the overflow level and the lowest point of the air inlet orifice of the inlet valve shall be 20 mm minimum as required by EN 1717 to prevent backflow.

In the case of adjustable overflow, the adjustment shall provide a dimension "*a*" of 20 mm minimum.

5.2.8 Outlet valve leaktightness

When tested in accordance with 5.3.8, there shall be no leakage greater than three drops within 15 min.

5.2.9 Outlet valve reliability

When tested in accordance with 5.3.9, the outlet mechanism functions shall be ensured.

The flushing device shall not show any failure or permanent distortion of any components including linkages that prevents normal operation of the mechanism.

The outlet of the flushing device shall not show leakage greater than three drops within 15 min.

5.2.10 Operating force

When tested as described in 5.3.10, it shall be possible for the outlet mechanism to be actuated with a maximum force of 25 N.

5.2.11 Durability

Class 1 products conforming with 5.2.1, 5.2.3 to 5.2.9 and Clause 8 are deemed to be durable.

Normen-Download-Beuth-Ideal Standard GmbH-KdNr.6440676-LfNr.7390503001-2016-02-11 10:29

5.3 Test methods

5.3.1 General

The tests described are type tests (laboratory tests) and not quality control tests carried out during manufacture.

5.3.2 Flush volume

5.3.2.1 General

The flush volume(s) shall be as specified in Table 3.

The flush volume(s) for one-piece and close-coupled cisterns supplied with a WC pan shall conform with the value(s) specified by the manufacturer.

5.3.2.2 Determination of the full flush volume

— Install the cistern on a firm flat horizontal or vertical surface as appropriate.

— Fill the flushing cistern via an inlet valve to the level indicated by the manufacturer.

— Shut off the supply.

— Operate the flushing mechanism control and collect the water delivered.

— Measure the volume using a calibrated container.

— Perform the test three times.

— If there are differences in the volumes delivered, calculate the arithmetic mean for the three volumes.

— In the case of flushing cisterns that provide a choice of flush volumes, the test shall be repeated for each of these flush volumes.

5.3.2.3 Determination of the flush volume for water-saving devices

5.3.2.3.1 Double-action water-saving devices

— Fill the flushing cistern via an inlet valve to the level indicated by the manufacturer.

— Shut off the supply.

— Operate the flushing mechanism control and stop the flush after 1,5 s whilst collecting the water delivered.

— Measure the volume using a calibrated container.

— Perform the test three times.

— If there are differences in the volumes delivered calculate the arithmetic mean for the three volumes.

— In the case of flushing cisterns that provide different flush volumes, the test shall be repeated for each of these volumes.

Normen-Download-Beuth-Ideal Standard GmbH-KdNr.6440676-LfNr.7390503001-2016-02-11 10:29

5.3.2.3.2 Double-control water-saving devices

— Fill the flushing cistern via an inlet valve to the level indicated by the manufacturer.

— Shut off the supply.

— Operate the control for the reduced flush volume and collect the water delivered.

— Measure the volume using a calibrated container.

— Perform the test three times.

— If there are differences in the volumes delivered, calculate the arithmetic mean for the three volumes.

— In the case of flushing cisterns that provide different flush volumes, the test shall be repeated for each of these volumes.

5.3.3 Flush rate

5.3.3.1 Test apparatus

a) For flushing cisterns equipped with a flush pipe, the test shall be carried out with the flush pipe using the height specified in Table 4.

For multiple-use close-coupled flushing cisterns, the test shall be carried out without a flush pipe.

b) A pressure sensor with the following characteristics shall be used:

1) measuring range from 0 MPa to 0,005 MPa (from 0 bar to 0,05 bar);

2) accuracy > class 1;

3) response time ≤ 10 ms;

4) acquisition rate ≥ 40 acquisitions per second.

Normen-Download-Beuth-Ideal Standard GmbH-KdNr.6440676-LfNr.7390503001-2016-02-11 10:29

Dimensions in millimetres

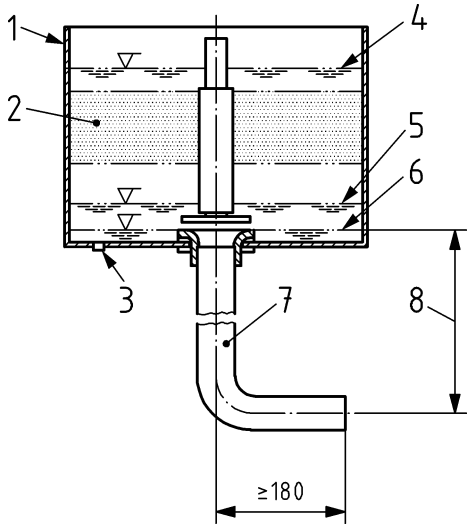

Key

1	flushing cistern	5	residual water level
2	measured volume	6	seat level
3	pressure sensor	7	flush pipe
4	nominal water level	8	test height (see Table 4)

Figure 9 — Test arrangement for testing low-level, mid-level and built-in flushing cisterns

5.3.3.2 Determination of the residual water level

— Fill the flushing cistern via an inlet valve to the water level indicated by the manufacturer.

— Shut off the supply.

— Operate the flushing mechanism.

— Record the residual water level, when flushing is completed.

— Perform the test three times.

— If there are differences in the levels obtained, record the highest residual water level.

— In the case of flushing cisterns with alternative flush volumes indicated, the residual water level shall be established for each volume.

— In the case of flushing cisterns having an adjustment of flushing volumes via the outlet valve, the increased residual water level shall be established and marked for each of the adjustable flushing water volumes.

5.3.3.3 Establishing the measuring points to measure the flush rate

5.3.3.3.1 General

In order to measure the flush rate, it is necessary to establish the measuring points indicated in Figures 10, 11 and 12.

Normen-Download-Beuth-Ideal Standard GmbH-KdNr.6440676-LfNr.7390503001-2016-02-11 10:29

5.3.3.3.2 Flushing cisterns with an outlet valve adjustment for flushing volumes of 6 l, 7 l or 9 l respectively

The determination of the measuring points and the adjustment of the water level are illustrated in Figure 10.

The choice of measuring points is significant for measuring the flush rate.

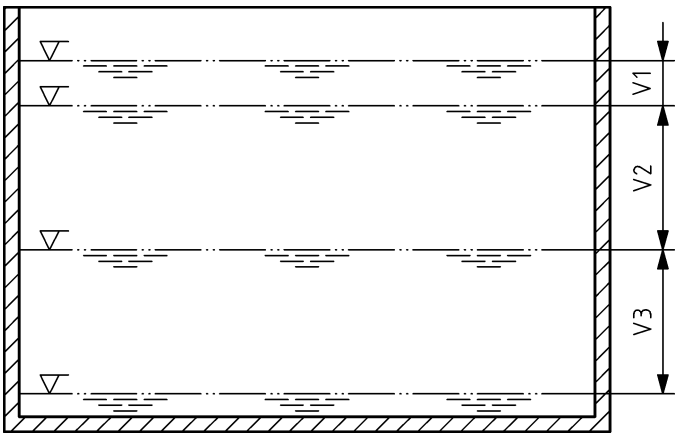

Key

V1 starting volume (full flush 1,0 l)

V2 measuring volume (full flush 3,0 l)

V3 finishing volume (full flush 2,0 l, 3,0 l, 5,0 l)

Figure 10 — Flushing cisterns with an outlet valve adjustment for flushing volumes of 6 l, 7 l or 9 l respectively

5.3.3.3.3 Flushing cisterns with an inlet valve adjustment for flushing volumes of 6 l, 7 l or 9 l respectively

The determination of the measuring points and the adjustment of the water level are illustrated in Figure 11.

The choice of measuring points is significant for measuring the flush rate.

Normen-Download-Beuth-Ideal Standard GmbH-KdNr.6440676-LfNr.7390503001-2016-02-11 10:29

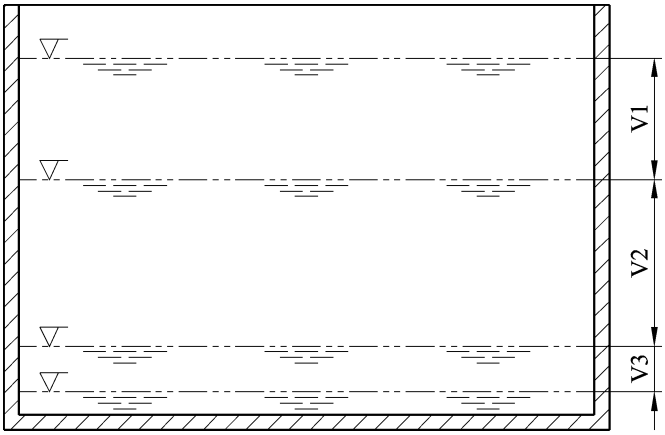

Key

V1 starting volume (full flush 1,0 l, 2,0 l, 4,0 l)

V2 measuring volume (full flush 3,0 l)

V3 finishing volume (full flush 2,0 l)

Figure 11 — Flushing cisterns with an inlet valve adjustment for flushing volumes of 6 l, 7 l or 9 l respectively

5.3.3.3.4 Flushing cisterns with a combined outlet/inlet valve adjustment flushing volume of 4,0 l or 5,0 l respectively

Flushing cisterns with a combined outlet/inlet valve adjustment flushing volume of 4,0 l or 5,0 l and the determination of the measuring points and the adjustment of the water level are illustrated in Figure 12.

The choice of measuring points is significant for measuring the flush rate.

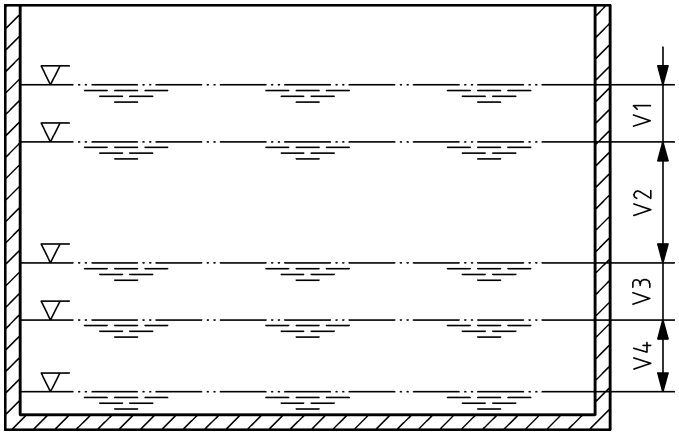

Key

V1 starting volume (full flush 1,0 l)

V2 measuring volume (full flush ≥ 2,0 l)

V3 finishing volume (full flush 1,0 l)

V4 residual volume (full flush individual)

Figure 12 — Flushing cisterns with a combined outlet/inlet valve adjustment flushing volume of 4,0 l or 5,0 l respectively

Normen-Download-Beuth-Ideal Standard GmbH-KdNr.6440676-LfNr.7390503001-2016-02-11 10:29

EXAMPLE For a flush with 4 l in a 7 l flushing cistern:

Maximum adjustable flushing volume	7,0 l
Adjustment via the inlet valve to	5,5 l

Giving for full flush:

— V1 = 1,0 l;

— V2 = 2,0 l;

— V3 = 1,0 l;

— V4 = 1,5 l.

V4 being the volume remaining in the flushing cistern, controlled by the outlet valve.

5.3.3.3.5 Flushing cisterns having no flushing volume adjustment

For flushing cistern having no flushing volume adjustment, i.e. where the volume is permanently set to 4 l, 5 l, 6 l, 7 l or 9 l, the measuring points and the setting of the water level shall be established or obtained by analogy with the description in 5.3.3.3.2 to 5.3.3.3.4.

5.3.3.4 Determination of flush rate

5.3.3.4.1 General

For flushing cisterns providing the possibility of adjustment to different flushing volumes, the flush rate is to be measured at the adjustment corresponding to the lowest measuring points as 5.3.3.3.2 to 5.3.3.3.4.

5.3.3.4.2 Flush rate for complete flushing

— Fill the flushing cistern via an inlet valve to the level determined as described in 5.3.3.3.

— Shut off the water supply.

— Operate the flushing mechanism.

— Using the sensor established in the cistern as described in 5.3.3.1, record the pressure/time curve.

— Extrapolate from the recording the flush rate between the measuring points established as described in 5.3.3.3.

— The test shall be performed three times.

— The arithmetic mean of the three separate operations shall be taken as the flush rate.

5.3.4 Determination of the overflow capacity

— Record the overflow level.

— Supply the flushing cistern with a flush rate of 0,28 l/s for at least 60 s.

  In the case of a combined mechanism (inlet valve + flushing mechanism), supply the mechanism at a pressure of 0,6 MPa (6 bar) and force the inlet valve to be open for at least 60 s.

— Record the maximum water level when the level has stabilised.

Normen-Download-Beuth-Ideal Standard GmbH-KdNr.6440676-LfNr.7390503001-2016-02-11 10:29

— Shut off the water supply.

— Determine the water level 2 s after the water supply is shut-off (critical water level).

— Record the meniscus level after stabilisation.

5.3.5 Inlet valve opening characteristics

— Fill the flushing cistern using an inlet valve with a supply pressure of 0,3 MPa (3 bar) to the level(s) indicated by the manufacturer.

— In the case of a double-action flushing cistern, stop the flush after (1,5 ± 0,2) s or in the case of a double-control cistern, operate the reduced flush control.

— Verify opening of the inlet valve and re-filling of the cistern to the level(s) indicated by the manufacturer.

5.3.6 Determination of dimension "*c*"

Fill the flushing cistern using an inlet valve to the highest water level indicated by the manufacturer.

Measure dimension "*c*" representing the safety margin (see Figure 8) between the maximum nominal water level and the overflow level.

5.3.7 Determination of dimension "*a*"

Determine dimension "*a*" (see Figure 8) representing the distance between the lowest point of the inlet valve's air inlet orifice and the overflow level using the inlet valve manufacturer's marking as specified in EN 14124.

5.3.8 Outlet valve leak tightness

— A flush pipe is not fitted for this test.

— Fill the flushing cistern to the water level indicated by the manufacturer. In the case of flushing cisterns with adjustable levels, the minimum level shall be used.

— Actuate the flushing mechanism and allow the flushing cistern to fill again.

— Leave the flushing cistern for a period of 2 h.

— Wipe the outlet orifice dry.

— Place a piece of paper under the flushing cistern.

— Leave for 15 min. Observe and record any watermarks on the paper.

In the case of double-control mechanisms, the test is to be repeated using the reduced flush volume.

5.3.9 Outlet valve reliability test

5.3.9.1 Test apparatus

The test apparatus comprises:

— a flushing cistern which shall be filled through an inlet valve or an alternative filling device to accelerate the test;

Normen-Download-Beuth-Ideal Standard GmbH-KdNr.6440676-LfNr.7390503001-2016-02-11 10:29

— an automatic system allowing the flushing mechanism to be activated with a controlled force in the range of 25 N to 30 N and with a velocity of 5 cm/s in a period of 0,5 s to 1 s for the duration of the test. The system shall ensure that the outlet valve is fully closed before the flushing cistern is refilled;

— a water supply with a temperature of 7 °C to 25 °C.

A flush pipe is not fitted for this test.

5.3.9.2 Procedure

The test shall be performed using the highest water level in the flushing cistern when several alternative water levels are indicated.

One cycle consists of:

a) Fill the flushing cistern to the highest indicated water level indicated by the manufacturer.

b) Actuate the flush operating control by means of the automatic system.

c) Allow the mechanism to close again.

d) Re-fill the flushing cistern.

e) In the case of single-flush devices, submit the cistern to 50 000 of these cycles (category I) or 200 000 of these cycles (category II).

f) In the case of double-control devices the test is carried out:

   1) either: with three reduced flushes followed by a full flush for a total of 50 000 flushes (category I) or 200 000 flushes (category II);

   2) or: with 37 500 reduced flushes followed by 12 500 full flushes (category I) or 150 000 reduced flushes followed by 50 000 full flushes (category II).

g) Record any failure or permanent distortion of the outlet valve during and at the end of the test.

h) 2 h after completing the cycles, verify the leaktightness in accordance with 5.2.8.

5.3.10 Operating force

5.3.10.1 Test apparatus

Examples of typical test arrangements are shown in Figures 13 and 14.

Normen-Download-Beuth-Ideal Standard GmbH-KdNr.6440676-LfNr.7390503001-2016-02-11 10:29

Dimensions in millimetres

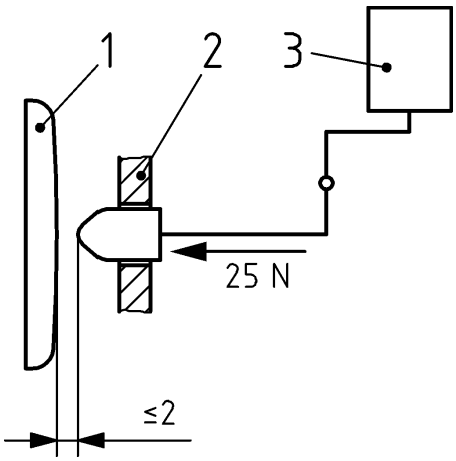

Key

1 push button or cistern operating mechanism

2 guide

3 test force

Figure 13 — Test apparatus for vertical operation

Dimensions in millimetres

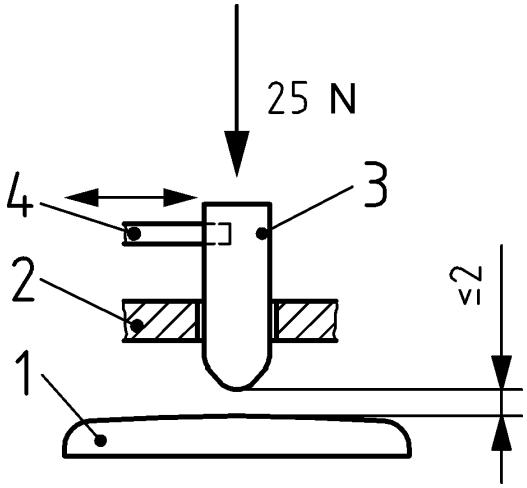

Key

1 push button or cistern operating mechanism

2 guide

3 test force

4 release

Figure 14 — Test apparatus for horizontal operation

5.3.10.2 Procedure

— Fill the flushing cistern to the maximum water level indicated by the manufacturer.

— Place the testing device 2 mm from the push button or cistern operating mechanism.

— Apply a maximum force of 25 N to the push button or cistern operating mechanism.

— Verify that the push button or cistern operating mechanism is activated within 0,5 s to 1 s.

5.3.11 Impact force

5.3.11.1 General

The impact force of the flushing cistern complete with the flush pipe according to Table 4 shall be measured with the test device shown in Figure 15. The flushing water from the flush pipe shall be directed against the sensor plate (90 mm diameter) to create an impact force. This impact force shall be measured with a load cell and expressed in newtons.

The test procedure consists of the measurement procedure and the calculation procedure using calibrated test equipment.

5.3.11.2 Test device

The test device shall meet the following requirements:

— The test device shall be in accordance with Figures 15 and 16.

Normen-Download-Beuth-Ideal Standard GmbH-KdNr.6440676-LfNr.7390503001-2016-02-11 10:29

— The load cell [1] shall have an accuracy of 0,2 g (C3 (OIML)) and a load capacity of 3 kg regardless of the mounting position.

— Measurement amplifier [2] and load cell shall form one system.

— The measurement amplifier shall work with a sampling frequency of 600 Hz and a 100 Hz Bessel filter.

— The system (consisting of the measurement amplifier and load cell) shall have a tare function.

— The water used for the test shall have a temperature between 7 °C and 25 °C.

Dimensions in millimetres

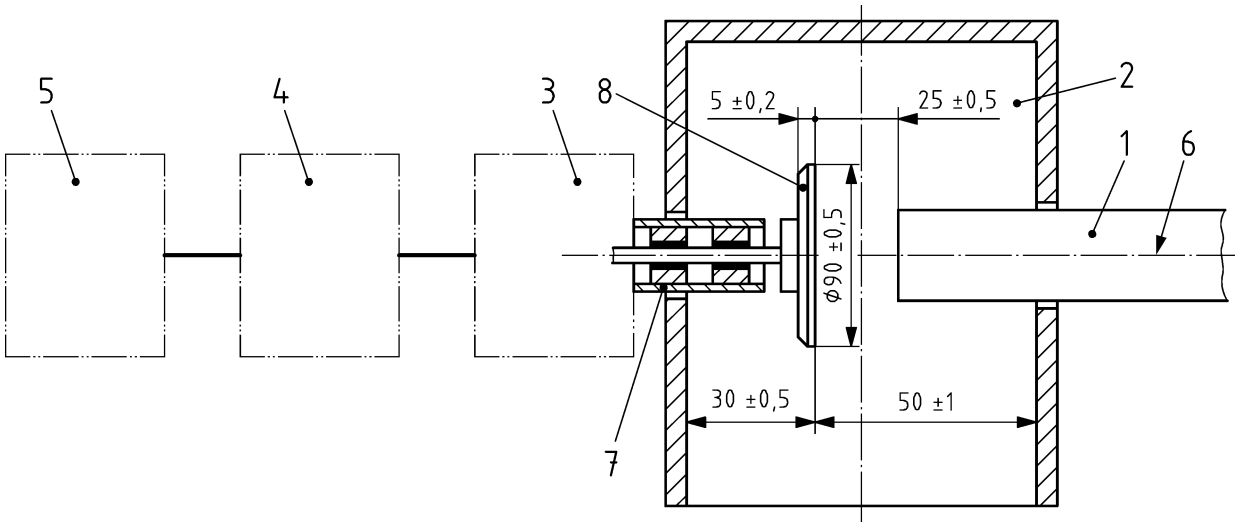

Key

1 flush pipe of the flushing cistern

2 splash guard (for details see Figure 16)

3 load cell unit

4 measurement amplifier for data acquisition

5 computer for recording and evaluating the measurement data (with suitable software [3])

6 the centre axis of the flush pipe shall be in line with the centre axis of the sensor plate.

7 the mechanical connection between the sensor plate and the load cell shall be suitable for the correct function of the load cell. It is recommended to have short distances to the load cell and sufficient adequate bearings.

8 sensor plate

Figure 15 — Test device [4] to measure the impact force

1) Suitable test device (i.e. PW6DC3MR 3 kg) is available from Fa. Hottinger Baldwin Messtechnik GmbH, PO-Box 10 01 51, 64201 Darmstadt, GERMANY. This information is given for the convenience of users of this European Standard and does not constitute an endorsement by CEN of these products.
2) Suitable test device (i.e. MX840) is available from Fa. Hottinger Baldwin Messtechnik GmbH, PO-Box 10 01 51, 64201 Darmstadt, GERMANY. This information is given for the convenience of users of this European Standard and does not constitute an endorsement by CEN of these products.
3) Suitable software (i.e. Catman easy) is available from Fa. Hottinger Baldwin Messtechnik GmbH, PO-Box 10 01 51, 64201 Darmstadt, GERMANY. This information is given for the convenience of users of this European Standard and does not constitute an endorsement by CEN of these products.

Normen-Download-Beuth-Ideal Standard GmbH-KdNr.6440676-LfNr.7390503001-2016-02-11 10:29

Dimensions in millimetres

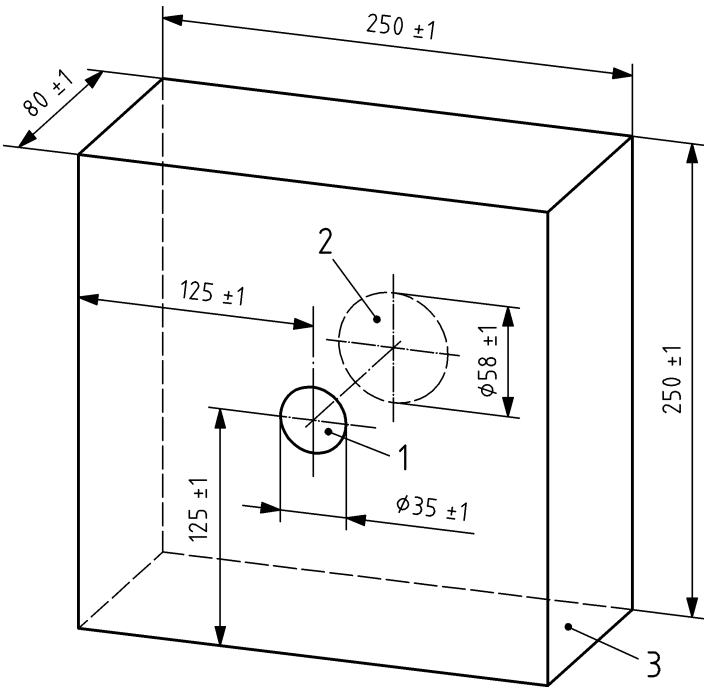

Key

1 hole diameter: (35 ± 1) mm for fixing the sensor plate including the mechanical connection to the load cell to the front of the splash guard

2 hole diameter: (58 ± 1) mm for fixing the flush pipe (position 1 of Figure 15) to the back of the splash guard

3 wall thickness minimum 5 mm

NOTE Dimensions shown are internal dimensions.

Figure 16 — Splash guard

It is not permissible to use other test equipment than the one shown in Figure 15.

5.3.11.3 Procedure for calibrating the load cell unit and the measurement amplifier

The test device (see Figure 15 except position 1) with all its components assembled shall be calibrated in its testing position with a force of 4 N.

5.3.11.4 Measurement procedure

1) Check and record the correct horizontal alignment of the flush pipe and the vertical alignment of the flushing cistern (see position 6 of Figure 15).

2) Record the water temperature.

3) Set the load cell unit and the measurement amplifier to zero by using the tare function of the system.

4) Start the recording of the impact force measurement values with a resolution of 600 Hz.

---

4) Suitable test device is available from Fa. LGA QualiTest GmbH, Dreikronenstr. 31, 97082 Würzburg, GERMANY. This information is given for the convenience of users of this European Standard and does not constitute an endorsement by CEN of these products.

Normen-Download-Beuth-Ideal Standard GmbH-KdNr.6440676-LfNr.7390503001-2016-02-11 10:29

5) Activate the flushing device for full flush with an activating speed of 14 cm/s. In the case of non-manually (e.g. electronic) activated outlet valve, the activating speed is not applicable.

6) Stop the recording of the measurement data after the complete flush.

7) Export the measurement data (time and force) into a table calculation file and store the data.

8) Repeat the procedure (3) to 6)) a further nine times (ten measurements).

5.3.11.5 Calculation procedure for fixed time frame 0,35 s to 0,5 s

1) Open the recorded measurement data.

2) Set the time point zero of the flush where the force signal exceeds 0,5 N for the first time and number this point with 1.

3) Number the datasets to point 299 beginning with the time point zero.

4) Calculate the average of the 90 force values from point 210 (0,35 s) to point 299 (0,5 s).

5) Record average of the 90 force values as the impact force of this measurement.

6) Evaluate the impact force for each measurement by repeating the procedure (1) to 5)) a further nine times**.**

7) Calculate the average of the ten tests (of 6)) to two decimal places the result of which is the impact force of the flushing cistern.

8) Record the impact force of the flushing cistern.

5.3.11.6 Calculation procedure for maximum impact force

1) Open the recorded measurement data.

2) Set the time point zero of the flush were the force signal exceeds 0,5 N for the first time and number this point with 1.

3) Determine the arithmetic average value of each possible 60 consecutive measuring values.

EXAMPLE

$$\overline{F_1} = \frac{1}{60}\sum_{i=1}^{60} F_i \qquad \overline{F_2} = \frac{1}{60}\sum_{i=2}^{61} F_i \qquad \overline{F_3} = \frac{1}{60}\sum_{i=3}^{62} F_i \qquad \ldots$$

where

$\overline{F_1}$ is the arithmetic mean of the impact force calculated out of the measurement point 1 to 60, in newtons;

$\overline{F_2}$ is the arithmetic mean of the impact force calculated out of the measurement point 2 to 61, in newtons;

$\overline{F_3}$ is the arithmetic mean of the impact force calculated out of the measurement point 3 to 62, in newtons;

$\overline{F_i}$ is the specific impact force of a measuring point, in newtons.

4) The impact force of this measurement is the maximum of all the average values.

Normen-Download-Beuth-Ideal Standard GmbH-KdNr.6440676-LfNr.7390503001-2016-02-11 10:29

5) Record the impact force of this measurement.

6) Evaluate the impact force for each measurement by repeating the procedure (1) to 5)) a further nine times.

7) Calculate the average of the ten tests (of 6)) to two decimal places, the result of which is the maximum impact force of the flushing cistern.

8) Record the impact force of the flushing cistern.

6 Functional requirements and test methods for class 2 products

6.1 Inlet valve

Either the first inlet valve or, in the event of this failing, all four of the remaining inlet valves shall comply with BS 1212-2, -3 or -4 subject to the amendments listed below:

— The water hardness during tests shall not exceed the range of (230 ± 20) ppm of calcium carbonate ($CaCO_3$) during the course of the test.

— The supply pressure for the endurance test described in Parts 3 and 4 shall be (0,15 ± 0,01) MPa ((1,5 ± 0,1) bar).

— Part 2 valves shall be subject to an endurance test as described in Parts 3 and 4 using a supply pressure of (0,15 ± 0,01) MPa ((1,5 ± 0,1) bar).

— The endurance test shall be undertaken for 200 000 cycles and, if the first inlet valve fails the test, the four valves subsequently tested shall all satisfy the requirements.

6.2 Backflow prevention

When tested in accordance with the backflow prevention requirements of Clauses 15 or 17 of BS 1212-3:1990 or BS 1212-4:1991 respectively there shall be no evidence of backflow.

6.3 Marking of flushing cistern

Every flushing cistern, other than a pressure flushing cistern, shall be clearly marked internally with an indelible line to show the intended volume of flush, together with an indication of that volume. Discharge volume(s) shall be based on measurement from the water level in the cistern using the manufacturer's original equipment to the residual water level in the cistern on completion of a flush.

6.4 Warning pipe and overflow provision

When tested as described in 6.10.2, every flushing cistern, not being a pressure flushing cistern, shall be fitted with a warning pipe connection arranged with the discharge level between 25 mm to 32 mm above the marked water level, or a no less effective device shall be provided. The top edge of any internal overflow shall be not less than 10 mm above the warning level.

6.5 Flush volume

6.5.1 Full flush

When tested as described in 6.10.3 with any adjustable flushing device set to deliver the maximum flush volume, the measured discharge shall on no occasion exceed 6 l.

Normen-Download-Beuth-Ideal Standard GmbH-KdNr.6440676-LfNr.7390503001-2016-02-11 10:29

6.5.2 Reduced flush

When tested as described in 6.10.3 with any adjustable flushing device set to deliver a reduced flush volume, the measured discharge shall on no occasion exceed two-thirds of the full-flush volume.

6.6 Flush rate

When tested as described in 6.10.4, the mean flush rate of discharge per flush shall be ≥ 1,85 l/s for the full flush and ≥ 1,6 l/s for the reduced flush, if provided.

6.7 Physical endurance and leakage of flushing device

When tested as described in 6.10.5, the flushing device shall not undergo any failure or permanent distortion of any components including linkages that prevents normal operation of the mechanism.

No more than two instances of leakage are permitted. A leak is defined as being visible discharge of water amounting to more than three separate drops. If the first flushing device fails the test, the four devices subsequently tested shall all satisfy the requirements.

6.8 Chemical endurance of flushing device

When tested as described in 6.10.6, there shall be:

— no dimensional alteration of any component greater than 1 mm or 5 % whichever is the lesser;

— no weight loss of any component greater than 1 g or 5 % whichever is the lesser;

— no visible sign of physical change such that performance is impaired;

— no deterioration in performance.

The flushing device shall not leak after undergoing a 3 000 cycle physical endurance test and the long-term leakage test.

6.9 Durability

Class 2 products conforming with 6.1, 6.5, 6.6, 6.7, 6.8 and Clause 8 are deemed to be durable.

6.10 Test methods

6.10.1 Inlet valve tests

6.10.1.1 Test apparatus

6.10.1.1.1 Apparatus as specified in BS 1212-2, -3 or -4, subject to the additional requirements specified in 6.1.

Supply pressure requirements for pressurised cisterns shall conform with the manufacturer's recommendations.

6.10.1.2 Procedure

Subject the inlet valve to the tests as specified in BS 1212-2, -3, or -4 as appropriate. In testing against Clause 17 of BS 1212-2:1990, BS 1212-3:1990 or BS 1212-4:1991 (modified in 6.1) if the first inlet valve fails, four further valves shall be tested.

Normen-Download-Beuth-Ideal Standard GmbH-KdNr.6440676-LfNr.7390503001-2016-02-11 10:29

6.10.1.3 Expression of results

Record whether the inlet valve complied with the requirements of BS 1212-2, -3 or -4 as modified by 6.1. For the test under Clause 17 of BS 1212-2:1990, BS 1212-3:1990 or BS 1212-4:1991 (as modified in 6.1), record whether the first inlet valves, or all four of the subsequent inlet valves, met the requirements.

6.10.2 Warning pipe and overflow provisions

6.10.2.1 Test apparatus

6.10.2.1.1 Flushing cistern with warning pipe connection or a device deemed to be no less effective and internal overflow, if provided, installed in accordance with the manufacturer's instructions.

6.10.2.1.2 Measuring device with an accuracy of ± 0,1 mm.

6.10.2.1.3 Water supply controlled by a stop valve.

6.10.2.2 Procedure

Set the flushing cistern level. Fill with water to the nominal static water level marked by the manufacturer. Measure the distance from the water level to the warning level, i.e. the invert of a side connection warning pipe connection or the top of a bottom connection warning pipe connection. If appropriate, measure the distance from the warning level to the top of any internal overflow.

6.10.2.3 Expression of results

Record compliance or any failure to comply with the requirements of 6.4.

6.10.3 Flush volume test

6.10.3.1 Apparatus

6.10.3.1.1 Flushing cistern, complete with fitments including flush pipe and cover, installed in accordance with the manufacturer’s instructions, on a firm, flat, vertical surface.

6.10.3.1.2 Measuring vessel capable of collecting the flush volume.

6.10.3.1.3 Water supply controlled by a stop valve.

6.10.3.2 Procedure

Set the dual-flush control or setting if provided, to the full-flush volume in accordance with the manufacturer’s instructions. Connect the water supply to the flushing cistern and fill to the marked water line. Operate the flushing mechanism three times, completing three flushing cycles. Fill the flushing cistern to the water line. Shut off the water supply, unless essential for the normal operation of the flushing device.

NOTE Where a water supply is essential for the normal operation of the device, it is recommended to maintain the supply at a hydraulic pressure of (0,15 ± 0,01) MPa ((1,5 ± 0,1) bar) or the minimum required to operate the device, whichever is the greater.

Operate the flushing device and collect the water in the measuring vessel. Record the volume of water collected. Repeat the procedure a further four times.

Reset the dual-flush control or setting, if provided, to the reduced-flush volume and repeat the procedure five times.

Normen-Download-Beuth-Ideal Standard GmbH-KdNr.6440676-LfNr.7390503001-2016-02-11 10:29

6.10.3.3 Expression of results

Measure the volume of water collected in the measuring vessel after each flush cycle, and record compliance or any failure to comply with the requirements of 6.5.

6.10.4 Flush rate test

6.10.4.1 Apparatus

6.10.4.1.1 Flushing cistern, complete with fitments including flush pipe and cover, installed in accordance with the manufacturer's instructions on a firm, flat, vertical surface.

6.10.4.1.2 Calibrated measuring container.

6.10.4.1.3 Fluid level sensing devices.

6.10.4.1.4 Electronic timer.

6.10.4.1.5 Water supply controlled by a stop valve.

6.10.4.1.6 Power supply.

6.10.4.2 Procedure

Set the dual-flush controller or setting, if provided, to the full-flush volume in accordance with the manufacturer's instructions. Connect the water supply to the flushing cistern and fill to the marked water line. Shut off the water supply, unless essential for the normal operation of the flushing device.

NOTE Where a water supply is essential for the normal operation of the device, it is recommended to maintain the supply at a hydraulic pressure of (0,15 ± 0,01) MPa ((1,5 ± 0,1) bar) or the minimum required to operate the device, whichever is the greater.

Operate the flushing device completing one flushing cycle. On completion of the flush, using the calibrated measuring container, add 0,5 l of water to the flushing cistern. Locate and position a fluid sensing device at the water level in the flushing cistern. Using the calibrated measuring container, add further water to the flushing cistern equivalent to the volume of full-flush recorded in 6.10.3.3 less 1,0 l. Locate and position a second fluid sensing device at the water level in the flushing cistern. Add further water to the cistern up to the marked water level for the full-flush volume. Connect the two fluid level sensing devices to the electronic timer and connect to the power supply. Operate the flushing device and, on completion of the flush, record the time taken to discharge the volume of water between the fluid level sensing devices as displayed on the timer. Repeat the procedure a further four times.

If the flushing device is provided with a reduced flush facility, shut off the water and power supplies, and operate the flushing mechanism. Using the calibrated container, add to the flushing cistern a volume of water equivalent to the difference between the full-flush volume and reduced-flush volume as recorded in 6.10.3.3. Add a further 0,5 l. Locate and position a fluid level sensing device at the water level in the flushing cistern. Using the calibrated measuring container add further water to the flushing cistern until it is filled to a volume equivalent to the volume of full flush recorded in 6.10.3.3 less 1,0 l. Locate and position a second fluid sensing device at this water level in the flushing cistern. Add further water to the flushing cistern, up to the marked water level for the full-flush volume recorded in 6.10.3.3. Turn on the power supply. Set the dual-flush controller or setting to the reduced-flush volume in accordance with the manufacturer's instructions. Operate the flushing device and, on completion of the flush, record the time taken to discharge the volume of water between the fluid level sensing devices as displayed on the timer. Repeat the procedure a further four times.

6.10.4.3 Expression of results

From the five recorded times, at each flush volume, determine the average time and, using the following formula, calculate the mean rate of discharge using the following methods.

Normen-Download-Beuth-Ideal Standard GmbH-KdNr.6440676-LfNr.7390503001-2016-02-11 10:29

For the full flush

$$\frac{\text{Volume of discharge per full flush in litres (recorded in 6.10.3.3)} - 1{,}0\ \text{l}}{\text{Average time in seconds (recorded in 6.10.4.3)}}$$

For the reduced flush

$$\frac{\text{Volume of discharge per reduced flush in litres (recorded in 6.10.3.3)} - 1{,}5\ \text{l}}{\text{Average time in seconds (recorded in 6.10.4.3)}}$$

6.10.5 Physical endurance and leakage test of flushing device

6.10.5.1 Test apparatus

6.10.5.1.1 Flushing cistern, complete with fitments including flushing device, flush pipe and cover, installed in accordance with the manufacturer's instructions.

6.10.5.1.2 Means of operating the flushing limiter activator automatically in accordance with the manufacturer's instructions.

6.10.5.1.3 Water supply maintained at a hydraulic pressure of (0,15 ± 0,01) MPa ((1,5 ± 0,1) bar), or the minimum pressure required to operate the flushing device whichever is the greater; having maintained water hardness not greater than the range (230 ± 20) ppm as calcium carbonate ($CaCO_3$) during the course of the test.

6.10.5.1.4 Paper of a type which changes colour when wet.

6.10.5.2 Procedure

Connect the water supply. For a single flush flushing device, operate the flushing device and, if appropriate, allow the flushing cistern to re-fill. Carry out the long-term leak test. Three drops or more observed on the paper shall be considered a leak. Initiate automatic operation of the flushing device. Carry out the short-term leakage test and inspect the flushing device after a further 2, 5, 10, 50, 100, 500, 1 000, 10 000 and every subsequent 10 000 cycles. If a leak is detected, the leak test interval, but not the test itself, shall re-start (e.g. the short-term leak test shall be undertaken after a further 1, 2, 5, 10, etc. cycles). Continue until 200 000 test cycles have been completed, and then subject the flushing device to the long-term leak test. If, at any point during the test, three leaks have been detected, the test terminates and four further flushing devices shall be subjected to the same test, which again terminates if three leaks have been detected for any one of the flushing devices.

For flushing devices with reduced flush option operate the flushing device for a full flush and, if appropriate, allow the cistern to re-fill. Carry out the long-term leak test. Three drops or more observed on the paper shall be considered a leak. The test then continues with the sequence three reduced flushes activated followed by a maximum flush. The flushing device shall be subject to the short-term leak test after 2, 5, 10, 50, 100, 500, 1 000, 10 000 and every subsequent 10 000 flushes (maximum and reduced flushes each counting as one flush). If a leak is detected, the leak test interval, but not the test itself, shall re-start (e.g. the short-term leak test shall be undertaken after a further 1, 2, 5, 10, etc. cycles). Continue until 200 000 test cycles have been completed, and then subject the flushing device to the long-term leak test. If at any point during the test, three leaks have been detected, the test terminates and four further flushing devices shall be subjected to the same test, which again terminates if three leaks have been detected for any one of the flushing devices.

The flushing device shall be inspected for wear at the same frequency as the short-term leak test. If the flushing device or any of its operating linkages suffers structural failure that affects operation, the test terminates.

Normen-Download-Beuth-Ideal Standard GmbH-KdNr.6440676-LfNr.7390503001-2016-02-11 10:29

6.10.5.3 Expression of results

Record compliance, or any failure to comply, with the requirements of 6.7.

6.10.6 Chemical endurance test of flushing device

6.10.6.1 Test apparatus

6.10.6.1.1 Weighing scales having a resolution of 0,1 g and an accuracy of ± 0,05 g.

6.10.6.1.2 Micrometer having a resolution of 0,1 mm and an accuracy of ± 0,05 mm.

6.10.6.1.3 Test solution (100 ml of domestic chlorine-based bleaching agent, consisting of up to 5 % sodium hypochlorite (NaClO) and anionic surfectants to every 900 ml of water).

6.10.6.1.4 Container.

6.10.6.2 Procedure

Dismantle the flushing device and weigh all seals, plungers, pistons or other components that initiate and stop water discharge and measure and record the principle dimensions, e.g. external diameter and thickness. Re-assemble the components and place the complete assembly in the container filled with test solution. Ensure that the assembly is covered by at least 100 mm depth of test solution. Leave for a period of (90 ± 2) days. Remove from the test solution and rinse under clean water.

WARNING — Appropriate precautions should be taken when using chlorine based agents. Do not touch raw crystals or the stock solution, or allow these to come into contact with clothing or easily combustible materials.

Subject the flushing limiter to a 3 000 cycle endurance test using the long-term leak test after the first and last cycles, and check for leaks.

6.10.6.3 Expression of results

Record compliance, or any failure to comply with the requirements of 6.8.

6.10.7 Requirements for compatibility testing of class 2 products

This subclause provides background notes on the testing and compatibility of elements of WC suites. Class 2 flushing cisterns are intended for use in class 2 WC suites as specified in EN 997.

NOTE Reference should be made to EN 997:2003, 6.17.11, extracts from which are reproduced below.

Inlet valves shall satisfy BS 1212-2, -3 or -4 as modified in 6.1.

Flushing devices shall satisfy the requirements with regard to physical and chemical endurance. They shall also be capable of satisfying the flush volume test at full and, if appropriate, reduced flush volumes. They should also be capable of contributing towards the other requirements when tested in combination.

Flushing cisterns shall consist of compliant components and so satisfy warning pipe and overflow provisions and the flush volume test. They should also be capable of contributing towards the other requirements when tested in combination.

It should be noted that, when undertaking tests involving more than one component of a WC suite, components which could adversely affect the results of the whole test should not be changed without re-starting that test.

Normen-Download-Beuth-Ideal Standard GmbH-KdNr.6440676-LfNr.7390503001-2016-02-11 10:29

7 Requirements and test methods for class 3 products

7.1 Requirements and test methods

Urinal flushing cisterns shall fulfil and be tested in accordance with the test methods and requirements of Clauses 5 and 8.

7.2 Adjustment

To assure that the functional unit, e.g. urinal and flushing cistern, meets the functional requirements of EN 13407, the manufacturer of the flushing cistern shall provide the installer with an instruction manual showing adjustments of the flush rate and the flush volume in accordance with the requirements of a particular urinal in the following ranges measured in accordance with EN 13407:2006, Annex B:

a) the flush volume: < 5 l;

b) the flush rate: 0,4 l/s to 0,6 l/s.

8 Acoustic characteristics

The acoustic class corresponds to that applicable to the inlet valve.

The values declared for the cistern shall comply with the requirements for group I or II as specified in EN 14124.

9 Dangerous substances

[A1] National regulations on dangerous substances may require verification and declaration on release, and sometimes content, when construction products covered by this standard are placed on those markets.

In the absence of European harmonized test methods, verification and declaration on release/content should be done taking into account national provisions in the place of use. [A1]

[A1]

10 Marking

The intended use of WC and urinal flushing cisterns is personal hygiene in accordance with the scope of this standard.

The intended use is also mentioned in Annex ZA, Tables ZA.1.1, ZA.1.2 and ZA.1.3. The abbreviation “PH” for the intended use personal hygiene may be used for CE marking.

A schematic drawing of the product may optionally follow the abbreviation for personal hygiene.

EXAMPLE 1 Use of full text: Personal hygiene

EXAMPLE 2 Use of abbreviation: PH

EXAMPLE 3 Use of the abbreviation and the optional schematic drawing: PH

Normen-Download-Beuth-Ideal Standard GmbH-KdNr.6440676-LfNr.7390503001-2016-02-11 10:29

WC and urinal flushing cisterns belong always to one class and type at least. For each class and type a set of requirements to be tested (see 11.2.2) is defined. Due to this a WC and urinal flushing cistern can be described with a designation code which includes all fulfilled essential requirements.

The relevant product characteristics and the Essential Characteristics for WC and urinal flushing cisterns including their abbreviations are given in Tables 5, 6 and 7.

Table 5 — Characteristics and abbreviations for class 1 products

Abbreviations	Characteristics
EN 14055	Number of European Standard for WC and urinal flushing cisterns for product designation
CL 1	WC flushing cisterns for specified flush volumes
(X/Y)	Specified flush volume 9 l, 7 l, 6 l, 5 l or 4 l and optional minimum inlet valve pressure
VR (x)	Outlet valve reliability (category I or II)
NL (z)	Noise level (group I or II)
WL	Watertightness/leaktightness
DA	Durability

Table 6 — Characteristics and abbreviations for class 2 products

Abbreviations	Characteristics
EN 14055	Number of European Standard for WC and urinal flushing cisterns for product designation
CL 2	WC flushing cisterns intended for WC suites with flush volume ≤ 6 l
VR	Outlet valve reliability
NL	Noise level
WL	Watertightness/leaktightness
DA	Durability

Normen-Download-Beuth-Ideal Standard GmbH-KdNr.6440676-LfNr.7390503001-2016-02-11 10:29

Table 7 — Characteristics and abbreviations for class 3 products

Abbreviations	Characteristics
EN 14055	Number of European Standard for WC and urinal flushing cisterns for product designation
CL 3	Class 1 flushing cistern intended for urinals for flush volume < 5 l and flush rate from 0,4 l/s to 0,6 l/s
(X/Y)	Specified flush volume 9 l, 7 l, 6 l, 5 l or 4 l and optional minimum inlet valve pressure
VR (x)	Outlet valve reliability (category I or II)
NL (z)	Noise level (group I or II)
WL	Watertightness/leaktightness
DA	Durability

All WC and urinal flushing cisterns shall be designated in accordance with the following system:

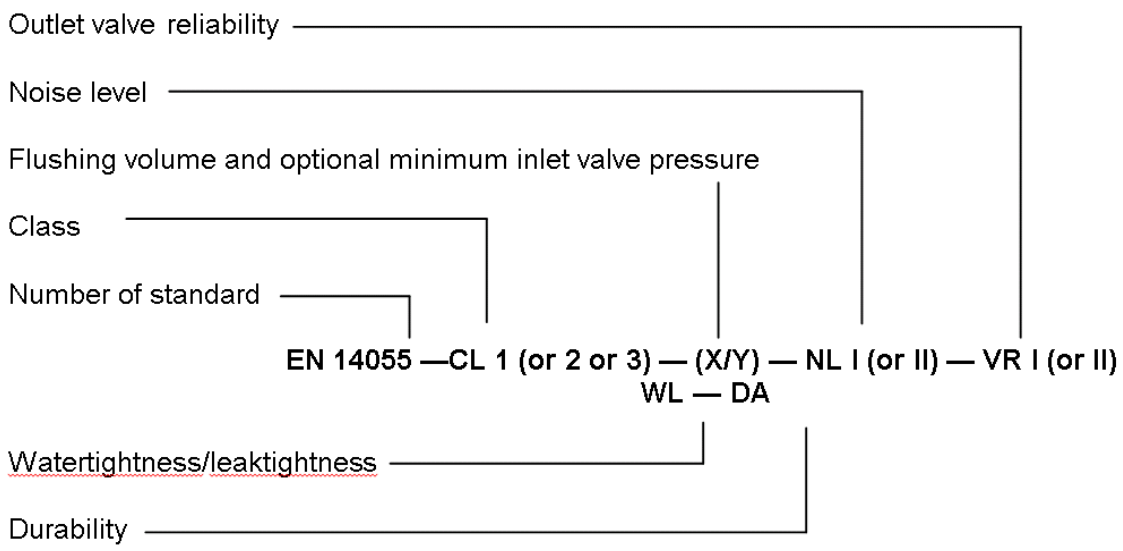

The declaration of the characteristics of the second line is considered being covered by the declaration of the relevant class. However, the characteristics should be listed when one of those characteristics is not declared.

EXAMPLE 4 Class 1 WC flushing cistern providing a flush volume of 6 l with a classified inlet valve having a noise level of group I and with an outlet valve providing reliability of category I.

EN 14055 — CL 1 — 6 — NL I — VR I

EXAMPLE 5 Class 2 WC flushing cistern for use with a WC pan(s) specified by the manufacturer to form a WC suite for which the manufacturer has exercised the NPD option for noise level.

EN 14055 — CL 2 — NL/NPD

EXAMPLE 6 Class 3 urinal flushing cistern providing a flush volume of 5 l at an inlet valve pressure of minimum 0,05 MPa (0,5 bar) with a classified inlet valve having a noise level of group I and with an outlet valve providing reliability of category I.

EN 14055 — CL 3 — 5/0,5 — NL I — VR I

A1

Normen-Download-Beuth-Ideal Standard GmbH-KdNr.6440676-LfNr.7390503001-2016-02-11 10:29

A1

11 Assessment and verification of constancy of performance – AVCP

11.1 General

The compliance of WC and urinal flushing cisterns with the requirements of this standard and with the performances declared by the manufacturer in the DoP shall be demonstrated by:

— determination of the product type (see 11.2);

— factory production control by the manufacturer (FPC), including product assessment (see 11.3).

The manufacturer shall always retain the overall control and shall have the necessary means to take responsibility for the conformity of the product with its declared performance(s).

11.2 Type testing

11.2.1 General

All performances related to characteristics included in this standard shall be determined when the manufacturer intends to declare the respective performances unless the standard gives provisions for declaring them without performing tests. (e.g. use of previously existing data, CWFT and conventionally accepted performance).

Assessment previously performed in accordance with the provisions of this standard, may be taken into account provided that they were made to the same or a more rigorous test method, under the same AVCP system on the same product or products of similar design, construction and functionality, such that the results are applicable to the product in question.

For the purposes of assessment, the manufacturer's products may be grouped into families, where it is considered that the results for one or more characteristics from any one product within the family are representative for that same characteristics for all products within that same family.

Products may be grouped in different families for different characteristics.

Reference to the assessment method standards should be made to allow the selection of a suitable representative sample.

In addition, the determination of the product type shall be performed for all characteristics included in the standard for which the manufacturer declares the performance:

— at the beginning of the production of a new or modified WC and urinal flushing cisterns (unless a member of the same product range), or

— at the beginning of a new or modified method of production (where this may affect the stated properties); or

— they shall be repeated for the appropriate characteristic(s), whenever a change occurs in the modified WC and urinal flushing cisterns trap design, in the raw material or in the supplier of the components, or in the method of production (subject to the definition of a family), which would affect significantly one or more of the characteristics.

Where components are used whose characteristics have already been determined, by the component manufacturer, on the basis of assessment methods of other product standards, these characteristics need not be re-assessed. The specifications of these components shall be documented.

Normen-Download-Beuth-Ideal Standard GmbH-KdNr.6440676-LfNr.7390503001-2016-02-11 10:29

Products bearing regulatory marking in accordance with appropriate harmonized European specifications may be presumed to have the performances declared in the DoP, although this does not replace the responsibility on the WC and urinal flushing cisterns manufacturer to ensure that the WC and urinal flushing cisterns as a whole is correctly manufactured and its component products have the declared performance values.

11.2.2 Test samples, testing and compliance criteria

The number of samples of WC and urinal flushing cisterns to be tested/assessed shall be in accordance with Table 8 and/or Table 9 and/or Table 10.

Table 8 — Type testing for class 1 products

Characteristic to be tested	Assessment method according to clauses of this European Standard	Number of samples	Compliance criteria
Flushing cistern equipment	5.1.1	1	5.1.1
Water supply connection	5.1.2	1	5.1.2
Flexible hoses	5.1.3	1	5.1.3
Mechanical components	5.1.4	1	5.1.4
Connecting dimensions	5.1.5	1	5.1.5
Flush pipes	5.1.6	1	5.1.6
Flush volume	5.3.2	1	5.2.1
Water saving devices	5.2.1, 5.2.3	1	5.2.2
Flush rate	5.3.3	1	5.2.3
Overflow	5.3.4	1	5.2.4
Inlet valve opening	5.3.5	1	5.2.5
Safety margin-dimensions “c”	5.3.6	1	5.2.6
Backflow prevention	5.3.7	1	5.2.7
Leak tightness	5.3.8	1	5.2.8
Endurance	5.3.9	1	5.2.9
Operating force	5.3.10	1	5.2.10
Impact force	5.3.11	1	5.2.3

Normen-Download-Beuth-Ideal Standard GmbH-KdNr.6440676-LfNr.7390503001-2016-02-11 10:29

Table 9 — Type testing for class 2 products

Characteristic to be tested	Assessment method according to clauses of this European Standard	Number of samples	Compliance criteria
Inlet valve	6.1, 6.10.1	1	6.1
Backflow prevention	6.2	1	6.2
Marking	6.3	1	6.3
Warning pipe and overflow provision	6.10.2	1	6.4
Flush volume(s)	6.10.3	1	6.5
Flush rate	6.10.4	1	6.6
Flushing device: physical endurance and leakage	6.10.5	1	6.7
Flushing device: chemical endurance	6.10.6	1	6.8

Table 10 — Type testing for class 3 products

Characteristic to be tested	Assessment method according to clauses of this European Standard	Number of samples	Compliance criteria
Flushing cistern equipment	5.1.1	1	5.1.1
Water supply connection	5.1.2	1	5.1.2
Flexible hoses	5.1.3	1	5.1.3
Mechanical components	5.1.4	1	5.1.4
Connecting dimensions	5.1.5	1	5.1.5
Flush pipes	5.1.6	1	5.1.6
Flush volume	5.3.2	1	5.2.1
Water saving devices	5.2.1, 5.2.3	1	5.2.2
Flush rate	5.3.3	1	5.2.3
Overflow	5.3.4	1	5.2.4
Inlet valve opening	5.3.5	1	5.2.5
Safety margin-dimensions "*c*"	5.3.6	1	5.2.6
Backflow prevention	5.3.7	1	5.2.7
Leaktightness	5.3.8	1	5.2.8
Endurance	5.3.9	1	5.2.9
Operating force	5.3.10	1	5.2.10
Impact force	5.3.11	1	5.2.3

Normen-Download-Beuth-Ideal Standard GmbH-KdNr.6440676-LfNr.7390503001-2016-02-11 10:29

11.3 Factory production control (FPC)

11.3.1 General

The manufacturer shall establish, document and maintain an FPC system to ensure that the products placed on the market comply with the declared performance of the essential characteristics.

The FPC system shall consist of procedures, regular inspections and tests and/or assessments and the use of the results to control raw and other incoming materials or components, equipment, the production process and the product.

The results of inspections, test or assessments requiring action shall be recorded. The action to be taken when control values or criteria are not met shall be recorded.

NOTE Manufacturers having an FPC system which complies with EN ISO 9001 and which addresses the provisions of the present European Standard are considered as satisfying the FPC requirements of the Regulation (EU) No. 305/2011.

11.3.2 Equipment

11.3.2.1 Testing

All weighing, measuring and testing equipment shall be calibrated and regularly inspected in accordance with the documented procedures, frequencies and criteria.

11.3.2.2 Manufacturing

All equipment used in the manufacturing process shall be regularly inspected and maintained to ensure use; wear or failure does not cause inconsistency in the manufacturing process. Inspections and maintenance shall be carried out and recorded in accordance with the manufacturer's written procedures and the records retained for the period defined in the manufacturer's FPC procedures.

11.3.3 Raw materials and components

The specifications of all incoming raw materials and components shall be documented, as shall the inspection scheme for ensuring their compliance. In case supplied kit components are used, the constancy of performance system of the component shall be that given in the appropriate harmonized technical specification for that component.

11.3.4 Product testing and assessment

The manufacturer shall establish and document procedures to ensure that the stated values of all of the characteristics are maintained.

11.3.5 Non-complying products

The manufacturer shall have written procedures which specify how non-complying products shall be dealt with. Any such events shall be recorded as they occur and these records shall be kept for the period defined in the manufacturer's written procedures.

Where the product fails to satisfy the acceptance criteria, the provisions for non-complying products shall apply, the necessary corrective action(s) shall immediately be taken and the products or batches not complying shall be isolated and properly identified.

Once the fault has been corrected, the test or verification in question shall be repeated.

Normen-Download-Beuth-Ideal Standard GmbH-KdNr.6440676-LfNr.7390503001-2016-02-11 10:29

The results of controls and tests shall be properly recorded. The product designation, date of manufacture, test method adopted, test results and acceptance criteria shall be entered in the records under the signature of the person responsible for the control/test.

With regard to any control result not meeting the requirements of this European Standard, the corrective measures taken to rectify the situation (e.g. a further test carried out, modification of manufacturing process, throwing away or putting right of product) shall be indicated in the records.

11.3.6 Corrective action

The manufacturer shall have documented procedures that instigate action to eliminate the cause of non-conformities in order to prevent recurrence.

A1

Normen-Download-Beuth-Ideal Standard GmbH-KdNr.6440676-LfNr.7390503001-2016-02-11 10:29

Annex ZA
(informative)

A1 Clauses of this European Standard addressing the provisions of the EU Construction Products Regulation

ZA.1 Scope and relevant characteristics

This European Standard has been prepared under Mandate M/110 “Sanitary Appliances” as amended by M/139 given to CEN by the European Commission and the European Free Trade Association.

If this European Standard is cited in the Official Journal of the European Union (OJEU), the clauses of this standard, shown in this annex, are considered to meet the provisions of the relevant mandate, under the Regulation (EU) No. 305/2011.

This annex deals with the CE marking of WC and urinal flushing cisterns intended for the uses indicated in Tables ZA.1.1, ZA.1.2 and ZA.1.3 and shows the relevant clauses applicable.

This annex has the same scope as in Clause 1 of this standard related to the aspects covered by the mandate and is defined by Tables ZA.1.1, ZA.1.2 and ZA.1.3.

Table ZA.1.1 — Relevant clauses for class 1 products

Construction Product: **Intended use:**	**WC flushing cistern of class 1** **Personal hygiene**		
Essential Characteristics	**Requirement clauses in this European Standard**	**Regulatory classes**	**Notes**
Watertightness/leaktightness	5.2.8	—	Pass/Fail
Outlet valve reliability	5.2.9	—	Pass/Fail
Noise level	8	—	Pass/Fail
Flushing volume	5.2.1	—	Pass/Fail
Durability	5.2.11	—	Pass/Fail

Normen-Download-Beuth-Ideal Standard GmbH-KdNr.6440676-LfNr.7390503001-2016-02-11 10:29

Table ZA.1.2 — Relevant clauses for class 2 products

Construction product: **Intended use:**	**WC flushing cistern of class 2** **Personal hygiene**		
Essential Characteristics	**Requirement clauses in this European Standard**	**Mandated levels and/or classes**	**Notes**
Watertightness/leaktightness	6.7	—	Pass/Fail
Outlet valve reliability	6.7	—	Pass/Fail
Noise level	8	—	Pass/Fail
Flushing volume	6.5	—	Pass/Fail
Durability	6.9	—	Pass/Fail

Table ZA.1.3 — Relevant clauses for class 3 products

Construction product: **Intended use:**	**WC and urinal flushing cistern of class 3** **Personal hygiene**		
Essential Characteristics	**Requirement clauses in this European Standard**	**Mandated levels and/or classes**	**Notes**
Watertightness/leaktightness	5.2.8	—	Pass/Fail
Outlet valve reliability	5.2.9	—	Pass/Fail
Noise level	8	—	Pass/Fail
Flushing volume	5.2.1, 7.2	—	Pass/Fail
Durability	5.2.11	—	Pass/Fail

The declaration of the product performance related to certain Essential Characteristics is not required in those Member States (MS) where there are no regulatory requirements on these Essential Characteristics for the intended use of the product.

In this case, manufacturers placing their products on the market of these MS are not obliged to determine nor declare the performance of their products with regard to these essential characteristics and the option “No performance determined” (NPD) in the information accompanying the CE marking and in the declaration of performance (see ZA.3) may be used for those essential characteristics.

ZA.2 Procedure for assessment and verification of constancy of performance (AVCP) of WC and urinal flushing cisterns

ZA.2.1 System of AVCP

The AVCP system of WC and urinals flushing cisterns indicated in Tables ZA.1.1 to ZA.1.3, established by EC Decision 96/578/EC (OJ L254 of 8.10.1996 p.49) amended by EC Decision(s) 2001/596/EC (OJ L 209 p 33 of 2.8.2001) and 2002/592/EC (OJ L192 p 57 of 20.7.2002) is shown in Table ZA.2 for the indicated intended use(s) and relevant level(s) or class(es) of performance.

Normen-Download-Beuth-Ideal Standard GmbH-KdNr.6440676-LfNr.7390503001-2016-02-11 10:29

Table ZA.2 — System of AVCP

Product	Intended use	Level(s) or class(es)	AVCP system(s)
Flushing cistern	Personal hygiene	—	4
System 4: See Regulation (EU) No. 305/2011 (CPR) Annex V, 1.5.			

The AVCP of the WC and urinal flushing cisterns in Tables ZA.1.1, ZA.1.2 and ZA.1.3 shall be according to the AVCP procedures indicated in Table ZA.3 resulting from application of the clauses of this or other European Standard indicated therein. The content of tasks of the notified body shall be limited to those essential characteristics as provided for, if any, in Annex III of the relevant mandate and to those that the manufacturer intends to declare.

Table ZA.3 — Assignment of AVCP tasks for WC and urinal flushing cisterns used under system 4

Tasks		Content of task	AVCP clauses to apply
Task for the manufacturer	Determination of the product type on the basis of type testing, type calculation, tabulated values or descriptive documentation of the product	Essential Characteristics of relevant Table ZA.1.1 or Table ZA.1.2 or Table ZA.1.3 relevant for the intended use which are declared	11.2
	Factory production control (FPC)	Parameters related to Essential Characteristics of relevant Table ZA.1.1 or Table ZA.1.2 or Table ZA.1.3 relevant for the intended use	11.3

ZA.2.2 Declaration of performance (DoP)

ZA.2.2.1 General

The manufacturer draws up the DoP and affixes the CE marking on the basis of the different AVCP systems set out in Annex V of the Regulation (EU) No. 305/2011:

— the factory production control carried out by the manufacturer;

— the determination by the manufacturer of the product type on the basis of type testing, type calculation, tabulated values or descriptive documentation of the product.

ZA.2.2.2 Content

The model of the DoP is provided in Annex III of the Regulation (EU) No 305/2011.

In accordance with this Regulation, the DoP shall contain, in particular, the following information:

— the reference of the product type for which the declaration of performance has been drawn up;

— the AVCP system or systems of the construction product, as set out in Annex V of the CPR;

— the reference number and date of issue of the harmonized standard which has been used for the assessment of each Essential Characteristic;

— where applicable, the reference number of the Specific Technical Documentation used and the requirements with which the manufacturer claims the product complies.

Normen-Download-Beuth-Ideal Standard GmbH-KdNr.6440676-LfNr.7390503001-2016-02-11 10:29

The DoP shall in addition contain:

a) the intended use or uses for the construction product, in accordance with the applicable harmonized technical specification;

b) the list of Essential Characteristics, as determined in the harmonized technical specification for the declared intended use or uses;

c) the performance of at least one of the Essential Characteristics of the construction product, relevant for the declared intended use or uses;

d) where applicable, the performance of the construction product, by levels or classes, or in a description, if necessary based on a calculation in relation to its Essential Characteristics determined in accordance with the Commission determination regarding those Essential Characteristics for which the manufacturer shall declare the performance of the product when it is placed on the market or the Commission determination regarding threshold levels for the performance in relation to the Essential Characteristics to be declared.

e) the performance of those Essential Characteristics of the construction product which are related to the intended use or uses, taking into consideration the provisions in relation to the intended use or uses where the manufacturer intends the product to be made available on the market;

f) for the listed Essential Characteristics for which no performance is declared, the letters “NPD” (No Performance Determined).

Regarding the supply of the DoP, Article 7 of the Regulation (EU) No. 305/2011 applies.

The information referred to in Article 31 or, as the case may be, in Article 33 of Regulation (EC) No 1907/2006 (REACH) shall be provided together with the DoP.

ZA.2.2.3 Examples of DoP

The following give examples of a filled-in DoP for WC and urinal flushing cisterns.

EXAMPLE 1 Full-text version of DoP with attached list of product numbers (identification codes) for this DoP:

Normen-Download-Beuth-Ideal Standard GmbH-KdNr.6440676-LfNr.7390503001-2016-02-11 10:29

DECLARATION OF PERFORMANCE
No. ABC1234

1. Unique identification code of the product-type:
   For product number(s) see list attached
2 Type, batch or serial number or any other element allowing identification of the construction product as required under Article 11(4):
   WC flushing cistern
3. Intended use or uses of the construction product, in accordance with the applicable harmonized technical specification, as foreseen by the manufacturer:
   Personal hygiene (PH)
4. Name, registered trade name or registered trade mark and contact address of the manufacturer as required under Article 11(5):
   AnyCo SA,
   PO Box 21
   B-1050 Brussels, Belgium
   Tel. +32987654321 / Fax: +32123456789
   Email: anyco.sa@provider.be
5. Where applicable, name and contact address of the authorized representative whose mandate covers the tasks specified in Article 12(2):
   Anyone Ltd
   Flower Str. 24
   West Hamfordshire
   UK-589645 United Kingdom
   Tel. +44987654321 (Fax: +44123456789
   e-mail: anyone.ltd@provider.uk
6. System or systems of assessment and verification of constancy of performance of the construction product as set out in CPR (305/2011/EU), Annex V:
   System 4
7. In case of the declaration of performance concerning a construction product covered by a harmonized standard:
   Determination of product type and factory production control by the manufacturer
8. Declared performance:

Essential Characteristics[a]	Performance	Harmonized technical specification
Flushing volume	Pass	EN 14055:2010+A1:2015
Watertightness/leaktightness (WL)	Pass	
Outlet valve reliability (VR)	Pass	
Noise level (NL)	Pass	
Durability (DA)	Pass	
[a] Specific performance of essential characteristics are given by the designation code as cited in the attachment.		

9. The performance of the product identified in points 1 and 2 is in conformity with the declared performance in point 8.
   This declaration of performance is issued under the sole responsibility of the manufacturer identified in point 4.
   Signed for and on behalf of the manufacturer by:

……

(Name and function)

…….…… ……

(place and date of issue) (signature)

Normen-Download-Beuth-Ideal Standard GmbH-KdNr.6440676-LfNr.7390503001-2016-02-11 10:29

Attachment to Declaration of Performance

No. ABC1234

Product no.	Collection (optional)	Description (optional)	CE marking (optional)	Digits (optional)
6620 01	Amadea	Built-in WC flushing cistern	EN 14055-CL1-6-NL I – VR I	11
…..				

……

(Name and function)

…….…… ……..

(place and date of issue) (signature)

(Page/Pages)

Normen-Download-Beuth-Ideal Standard GmbH-KdNr.6440676-LfNr.7390503001-2016-02-11 10:29

EXAMPLE 2 Short-text version of DoP with attached list of product numbers (identification codes) for this DoP:

Declaration of Performance

No. ABC1234

1. **For product number (identification code) see list attached.**

2. **WC flushing cistern(s)**

3. **Personal hygiene (PH)**

4. **Any Co Ltd**

   Any Street 1
   12345 Example City
   Country
   Ph.: +49 987-8654-0
   Fax: +49 987-8654-1
   info@sanitary-plant.com

5. **n.a.**

6. **System 4**

7. **Determination of product type and factory production control by the manufacturer**

8.

Essential Characteristics[a]	Performance	Harmonized technical specification
Flushing volume	Pass	EN 14055:2010+A1:2015
WL	Pass	
VR	Pass	
NL	Pass	
DA	Pass	
[a] Specific performance of Essential Characteristics are given by the designation code as cited in the attachment.		

9. The performance of the product identified in points 1 and 2 is in conformity with the declared performance in point 8.

   This declaration of performance is issued under the sole responsibility of the manufacturer identified in point 4.

   Signed for and on behalf of the manufacturer by:

……

(Name and function)

…… ……

(place and date of issue) (signature)

(Page/Pages)

Normen-Download-Beuth-Ideal Standard GmbH-KdNr.6440676-LfNr.7390503001-2016-02-11 10:29

Attachment to Declaration of Performance

No. ABC1234

Product no.	Collection (optional)	Description (optional)	CE marking (optional)	Digits (optional)
6620 01	Amadea	Built-in WC flushing cistern	EN 14055-CL1-6-NL I – VR I	11
…..				

……

(Name and function)

…….…… ……..

(place and date of issue) (signature)

(Page/Pages)

ZA.3 CE marking and labelling

The CE marking symbol shall be in accordance with the general principles set out in Article 30 of Regulation (EC) No. 765/2008 and shall be affixed visibly, legibly and indelibly:

— to the WC or urinal flushing cistern

or

— to a label attached to it.

Where this is not possible or not warranted on account of the nature of the product, it shall be affixed:

— to the packaging

or

— to the accompanying documents.

The CE marking shall be followed by:

— the last two digits of the year in which it was first affixed;

— the name and the registered address of the manufacturer, or the identifying mark allowing identification of the name and address of the manufacturer easily and without any ambiguity;

— the unique identification code of the product type;

— the reference number of the declaration of performance;

— the level or class of the performance declared;

— the reference to the harmonized technical specification applied;

— the intended use as laid down in the harmonized technical specification applied.

The CE marking shall be affixed before the construction product is placed on the market. It may be followed by a pictogram or any other mark notably indicating a special risk or use.

Normen-Download-Beuth-Ideal Standard GmbH-KdNr.6440676-LfNr.7390503001-2016-02-11 10:29

Figures ZA.1 and ZA.2 give examples of the information related to products subject to AVCP system 4 to be given on the label.

CE	*CE marking, consisting of the “CE”-symbol*
AnyCo Ltd, PO Box 21, B-1050	*Name and the registered address of the manufacturer, or identifying mark*
15	*Last two digits of the year in which the marking was first affixed*
ABC1234	*Reference number of the DoP*
6620 01	*Unique identification code of the product-type*
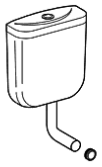 **PH**	*Intended use of the product as laid down in the European Standard applied*
EN 14055 — CL 1 — 6 — NL I — VR I	*No. of European Standard applied, as referenced in OJEU and level or class of the performance declared*

Figure ZA.1 — Example CE marking information of WC and urinal flushing cisterns

CE	*CE marking, consisting of the “CE”-symbol*
AnyCo Ltd, PO Box 21, B-1050	*Name and the registered address of the manufacturer, or identifying mark*
15	*Last two digits of the year in which the marking was first affixed*
ABC1234	*Reference number of the DoP*
6620 01	*Unique identification code of the product-type*
Personal hygiene	*Intended use of the product as laid down in the European Standard applied*
EN 14055 — CL 1 — 6 — NL I — VR I — DA	*No. of European Standard applied, as referenced in OJEU and level or class of the performance declared*

Figure ZA.2 — Example CE marking information of WC and urinal flushing cisterns with limited set of declared characteristics

A1

Normen-Download-Beuth-Ideal Standard GmbH-KdNr.6440676-LfNr.7390503001-2016-02-11 10:29

Bibliography

A1

[1] EN ISO 9001, *Quality management systems — Requirements (ISO 9001)* A1

Normen-Download-Beuth-Ideal Standard GmbH-KdNr.6440676-LfNr.7390503001-2016-02-11 10:29